ABSTRACT

INVESTIGATION OF BEARING CAPACITY OF THIN WALL RIBBED REINFORCED CONCRETE PANELS

HELLEN CHRISTODOULOU

Full scale tests were undertaken to determine the bearing capacity of thin wall ribbed reinforced concrete panels, since not enough research data is available to provide adequate information concerning the strength of such panels. Five full scale panels, with variable reinforcement, were tested as bearing walls under axial and eccentric loading. Deflections, crack appearance and propagation under increasing load, the behavior at junctions of thin walls, with ribs, and the ultimate capacity were recorded and analysed.

Results obtained were compared with calculated values based on present ACI design practice, with the purpose of determining if the empirical ACI design method, developed for solid walls, is also applicable for thin wall ribbed panels. (1). Results show that the ACI design method is applicable in evaluating bearing capacity of thin wall panels.

ACKNOWLEDGEMENTS

ACKNOWLEDGEMENTS

The experimental investigation reported herein was supported by research grants granted by Natural Sciences and Engineering Council Canada grant No. A1017, Le program de Formation de Chercheurs et D'action Concertee grant No. FQ-1645 (Gouvernement de Quebec), and Concordia University.

The author wishes to express her gratitude to Dr. Z. A. Zielinski and Dr. M. S. Troitsky for their invaluable advice and guidance, throughout the research program and the preparation of this thesis.

The author is indebted to Concordia University for the use of the Structural Laboratory facilities, and to the laboratory technicians B. Leroux and L. Stankevicius who assisted during tests. A special word of thanks is extended to the technicians of the machine shop who helped in preparing some of the equipment used.

The author would like to express her warmest gratitude to her parents for their deep love, understanding and support throughout the research program.

TABLE OF CONTENTS

TABLE OF CONTENTS

LIST OF TABLES

LIST OF TABLES

LIST OF FIGURES

LIST OF FIGURES

LIST OF FIGURES

NOTATIONS

NOTATIONS

a	Depth of equivalent rectangular stress block
A_g	Gross cross-sectional area
A_s	Area of steel reinforcement
B_1	ax, factor
ε_s	strain in steel, in/in
E_s	modulus of Elasticity of Reinforcement
f'_c	Ultimate compressive strength of concrete, psi
FC_1	Compressive force due to concrete in slab
FC_2	Compressive force due to concrete in rib
Fs_1	Compressive force due to rib reinforcement
Fs_2	Compressive force due to slab reinforcement
F_Y	Yield strength of reinforcement
h	Overall thickness of the wall
l_c	Vertical distance between supports
m	f_y/f'_c yield strength ratio of steel to concrete
n	E_s/E_c modular ratio
P_u	Failure load of test panels
P_f	Factored axial load strength of wall
P_u	Nominal axial load strength of wall.
p_m	Ratio of yielded reinforcement area to gross area
p_n	Ratio of non-yielded reinforcement area to gross area.
x	Distance from extreme compressive fibre to neutral axis.
ϕ	Strength reduction factor

CHAPTER I

INTRODUCTION

INTRODUCTION

Prefabricated,reinforced concrete panels have recently become more widely used in building industry for housing construction.Present technology enables the making of relatively thin panels.The required rigidity is provided with perimeter ribs.Such panels introduce economy in consumption of materials and have been applied for example, by Zielinski for walls and roofs for low cost housing construction. (2),(3).Such panels have been for a number of years a subject of research at Concordia University.Earlier tests were done on similar panels working as ribbed floor elements or wall beam system. (4),(5).

The main purpose of the present research is to study the behavior and strength of thin wall panels working as bearing wall elements.Not much data is available in this respect since most of previous research work on behavior and bearing strength was done on solid (thick) wall panels.(6), (7).

CHAPTER 2

RESEARCH PROGRAM

RESEARCH PROGRAM

2.1 DESCRIPTION OF TEST PANELS

The dimensions and reinforcement details of panels are shown in Figs. 2.2 - 2.7. The panels have a very thin 1 1/2 in. concrete slab reinforced with a wire mesh. The rigidity of the panels is provided by the 8 in. deep 2 1/2 in wide rib, which is reinforced with longitudinal bars and ties. The overall dimensions of the panels are 48 in. x 108 in. Some panels had additional cross ribs.

All panels have edge ribs formed in such a way that when placed side by side with in-situ placed grout a shear key joint is created. The panels may also be provided with inserts for welded connections. Additional strength in connection may be created by protruding main flexural reinforcement to the outside of the panels and into the cast in situ concrete in joists.

More detailed description of individual panels tested is given below.

Panel 168-9 (H1), was similar to panel 168-8. Also here a combination of wire meshes was used, a 6x6 - 6/6 over the entire length of the slab and a heavier mesh of 6x6 - 1/1 in the shorter support segement. Bars 1#3 and 1#4 were used in the upper longitudinal rib, 1#6 and 1#8 in the lower one. The ties provided were 5#4 in all ribs.

Panel 168-11 (H2); comparable to panel 168-9, contained a 6x6 - 10/10 wire mesh over the entire length of the membrane and a 6x6 - 1/1 mesh at mid height. Bars 1#6 and 1#8 were used as reinforcement of the lower longitudinal rib and 1#3 and 1#4 of the upper rib. This panel also had intermediate ribs similar as in panel 168-10 but reinforced with 1#3 and 1#4 bars.

Reinforcing steel yield strengths Fy were established by testing of 18 in long samples for every bar of reinforcing bar and wire mesh. Steel test results are shown in Table 2.1.

Panel 168-8 (H3), contained a wire mesh combination of one light wire mesh 146-1210 over the entire length of the slab and an additional mesh 6x6 - 6/6 in the shorter support segment. The lower rib had 2#5 rebars and the upper rib had 1#2 and 1#3 rebars. Both ribs had 2#4 stirrups.

Panel 169-10 (H4), contained reinforcement similar to panel 168-8 but in addition it had two intermediate ribs 6 in. deep and 1#6 and at 5#6 of the panel height. These ribs were reinforced with 1#2 bars each, and were provided for additional rigidity ot the membrane or as a frame for a possible window opening.

Panel 168-7 (H5), representing a window panel was the most heavily reinforced. It contained a two 6x6 - 6/6 welded wire fabric wire meshes as slab reinforcement, 2#9 in longitudinal lower rib, 1#3 and 1#4 and 1#6 stirrups in the longitudinal upper rib.

TABLE: 2.1 STEEL STRENGTHS TESTED

REINFORCEMENT TYPE		NOMINAL AREA IN^2	AVERAGE Fy PSI
MESH 146-1210	GAGE #10	0.0143	85,314.7
	GAGE #12	0.0087	87,314.7
MESH 6x6 - 10/10	GAGE #10	0.0143	83,449.9
MESH 6x6 - 6/6	GAGE #6	0.02895	72,884.3
MESH 6x6 - 11	GAGE #1	0.0629	76,364.6
REBAR	#2	0.05	44,133.4
REBAR	#3	0.11	55,218.2
REBAR	#4	0.20	48,066.7
REBAR	#5	0.31	49,731.2
REBAR	#6	0.44	43.522.7
REBAR	#6	0.44	51.098.8

2.2 LOADING SCHEMES

One panel marked H1 was loaded eccentrically and four panels marked H2-H5 were loaded at the center of gravity.

The load was applied by means of a hydraulic jack through a calibrated load cell, a stiffened beam and a 1/4 in. masonite pad. The load was applied in increments controlled by reading of pressure on the monometer and strain indicator from the load cell.

Dial gages were used to measure the horizontal (z-axis) and the vertical (y-axis) displacements. Loading scheme and positions of the dial gages are shown in Figure 2.1

In order to support panels on an area corresponding to panel cross section in the middle a 1/4 in. masonite pad was cut similar to cross section dimensions, as shown in figure 2.1.

The surface of the panels was either brushed clean or painted white for easier crack observation. Rectangular grid lines as seen in Figure 2.1 were drawn on the wall surface so as to facilitate the location and the marking of the cracks during testing.

Readings were taken at each load increment from all the dial gages and strain indicator and the panel was carefully examined for any cracks. In the event that a crack had occurred under the particular load it was visibly marked

along the crack with a marker for further easier observation and photography.

All the panels tested were loaded till failure. Crack patterns were recorded on scaled drawings and sequential photographs were taken. (Appendix C).

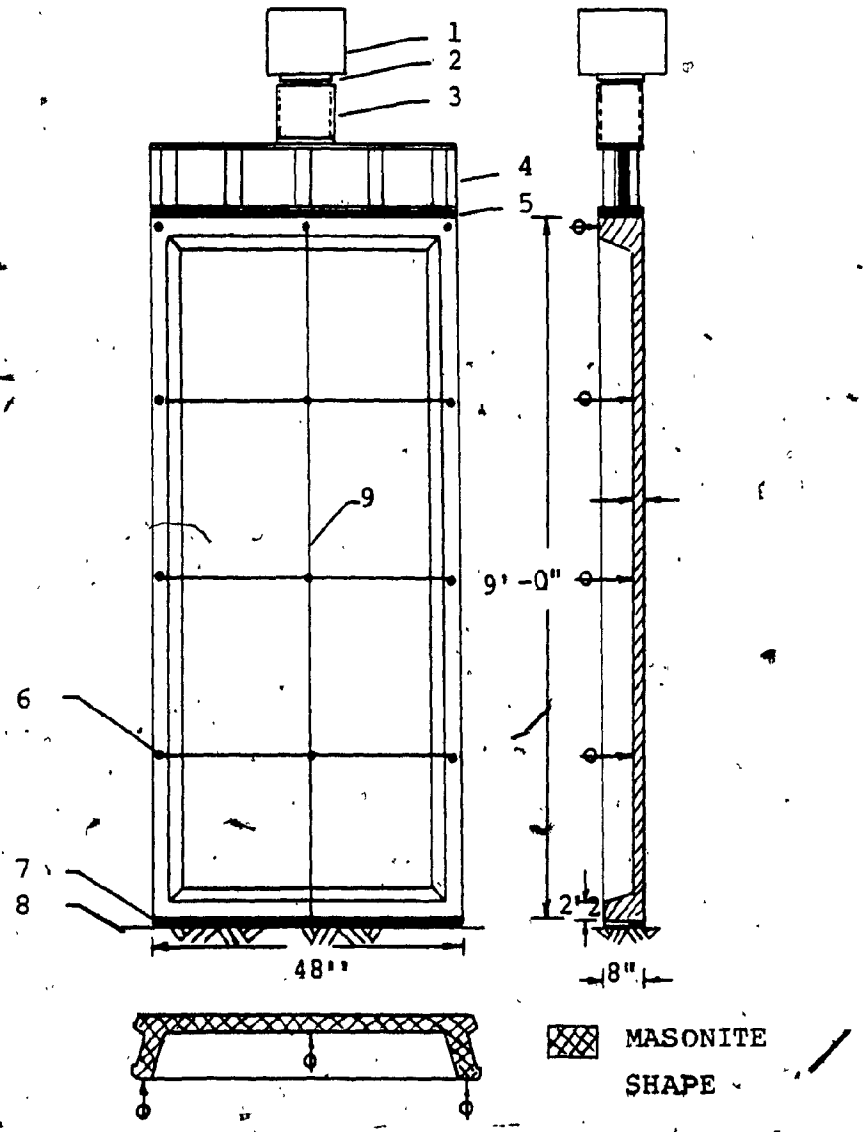

TYPICAL CROSS-SECTION

Fig. 2.1 LOADING SCHEME

1. HYDRAULIC JACK
2. 6" PISTON
3. LOAD CELL.
4. RIDGE BEAM.
5. MASONITE PAD
6. DIAL GAGES.
7. MASONITE PAD & MORTAR
8. RIGID FLOOR.
9. GRID LINES

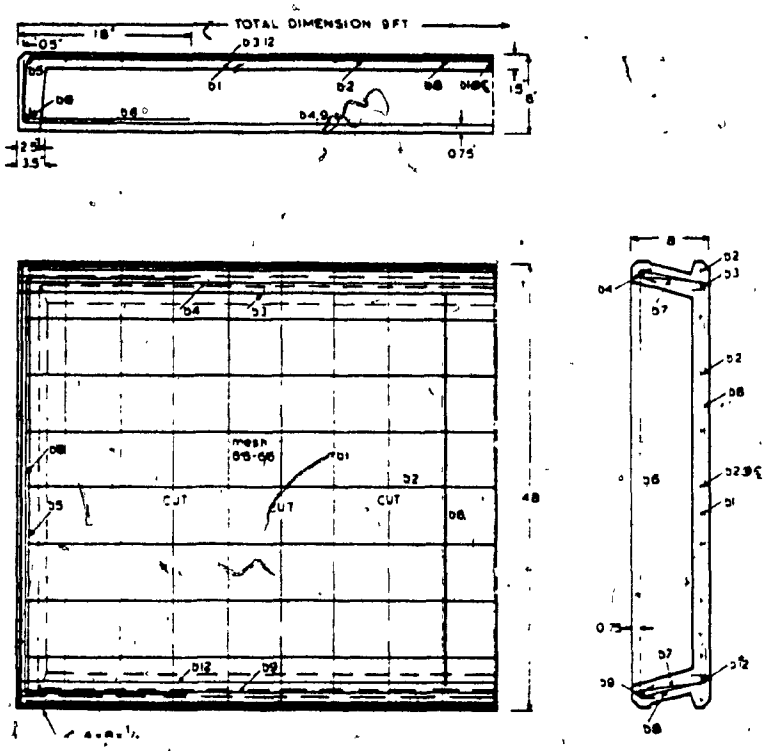

2.2: Example of Test Panel

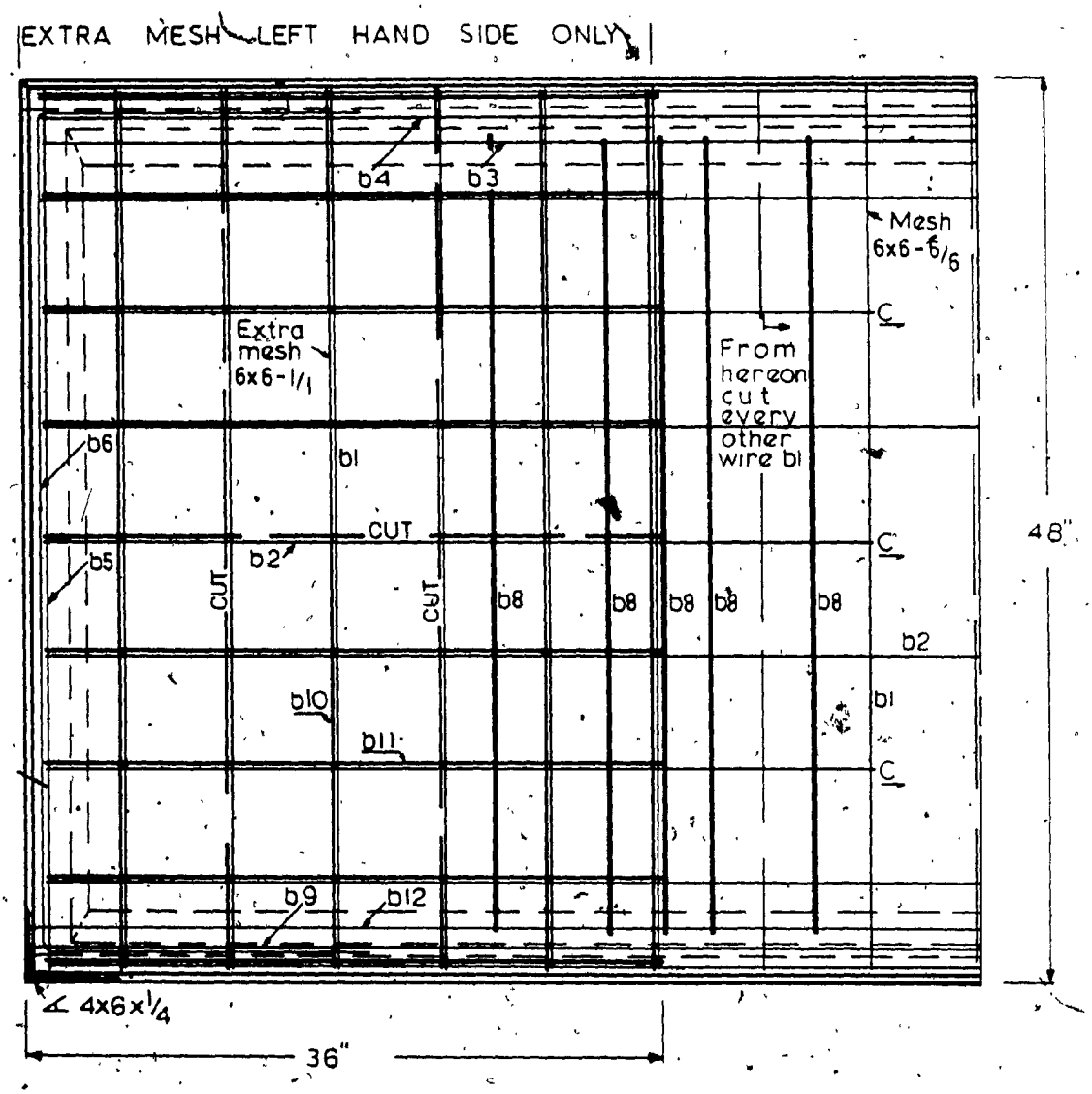

CUT - Whole wire to be cut off

C - Cut off remaining wire

Figure 2.3
Details of Reinforcement Panel 168-9 (H1)

REINFORCEMENT TYPE 168-9				
BAR Nº	TYPE & SIZE OF BARS	Nº OF BARS	LENGTH OF BAR, in	F_y ksi
b1	MESH	17 cut 6	46 25	
b2	6x6 - 6/6	9 cut 3	122.5	
b3	#3	1	122.5	40
b4	#4	1	119.5	40
b5	#2	2	46 25	40
b6	#2	2	82.25	40
b7	#2	38	10.75	40
b8	#4	5	65.25	40
b9	#8	1	108	60
b10	EXTRA MESH	6 cut 2	134	
b11	6x6 - 1/1	9 cut 1	35.5	
b12	#6	1	108	40

Figure 2.3a
Details of Reinforcement Panel 168-9 (H1)

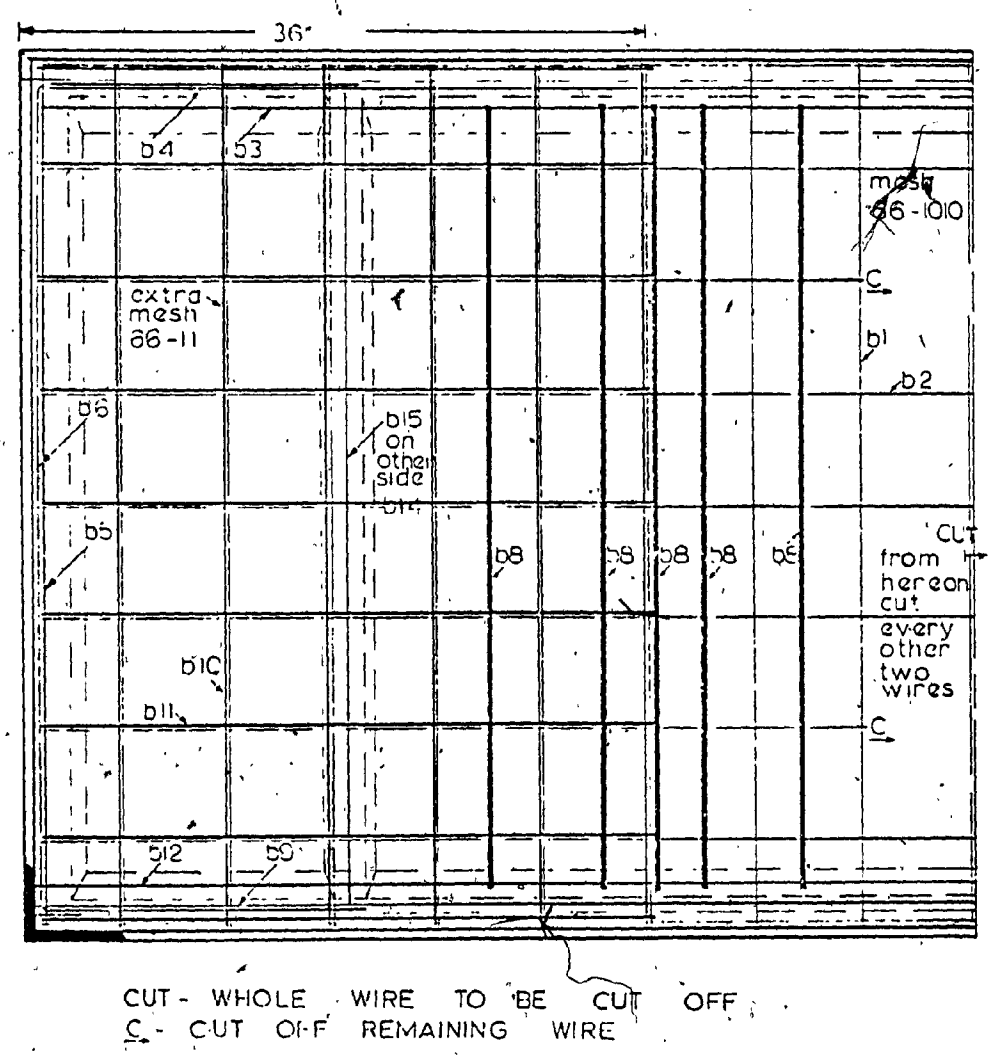

Figure 2.4
Details of Reinforcement Panel 168-11 (H2)

BAR Nº	TYPE & SIZE OF BARS	Nº OF BARS	LENGTH OF BAR, in.	F_y ksi.
b1	mesh	17	46.25	
b2	66-10.0	9	122.5	
b3	*3	1	122.5	40
b4	*4	1	119.5	40
b5	*2	2	46.25	40
b6	*2	2	82.25	40
b7	*2	[illegible]	10.75	40
b8	*4	5	65.25	40
b9	*8	1	108	60
b10	mesh	6	134	
b11	66-11	9	35.5	
b12	*5	1	108	60
b14 b15	*3 rhs rib *4 lhs rib	1	56.75	40

Figure 2.4a
Details of Reinforcement Panel 168-11 (H2)

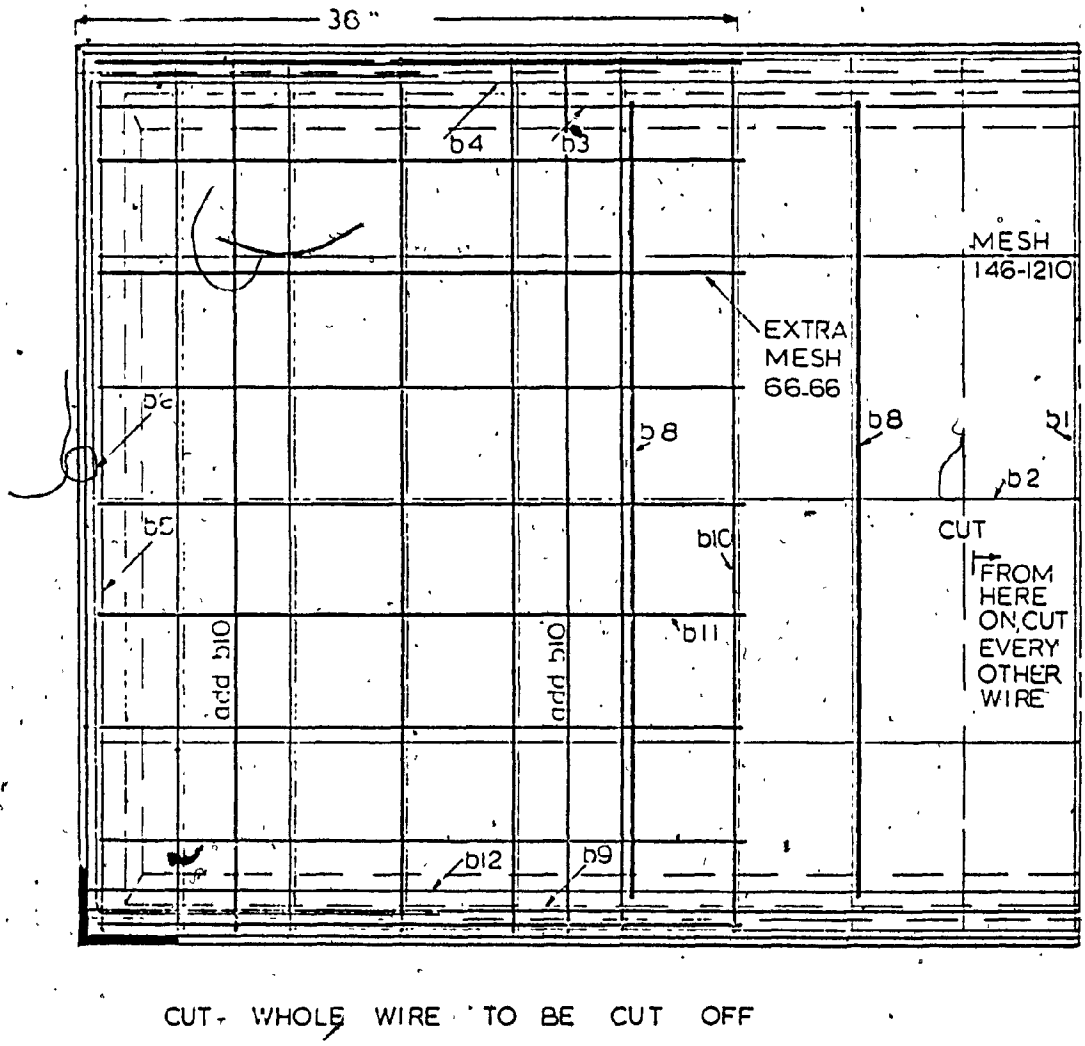

CUT - WHOLE WIRE TO BE CUT OFF

Figure 2.5
Details of Reinforcement Panel 168-8 (H3)

BAR Nº	TYPE & SIZE OF BARS	Nº OF BARS	LENGTH OF BAR, in	F_y ksi.
b1	mesh 146-1210	17 cuts	46.25	[illegible]
b2		5	122.5	[illegible]
b3	#2	1	122.5	40
b4	#3	1	119.5	40
b5	#2	2	46.25	40
b6	#2	2	82.25	40
b7	#2		10.75	40
b8	#4	2	65.25	40
b9	#5	1	108	60
b10	mesh 66-66	6 add 2	134	
b11		9	35.5	
b12	#5	1	108	60

Figure 2.5a
Details of Reinforcement Panel 168-8 (H3)

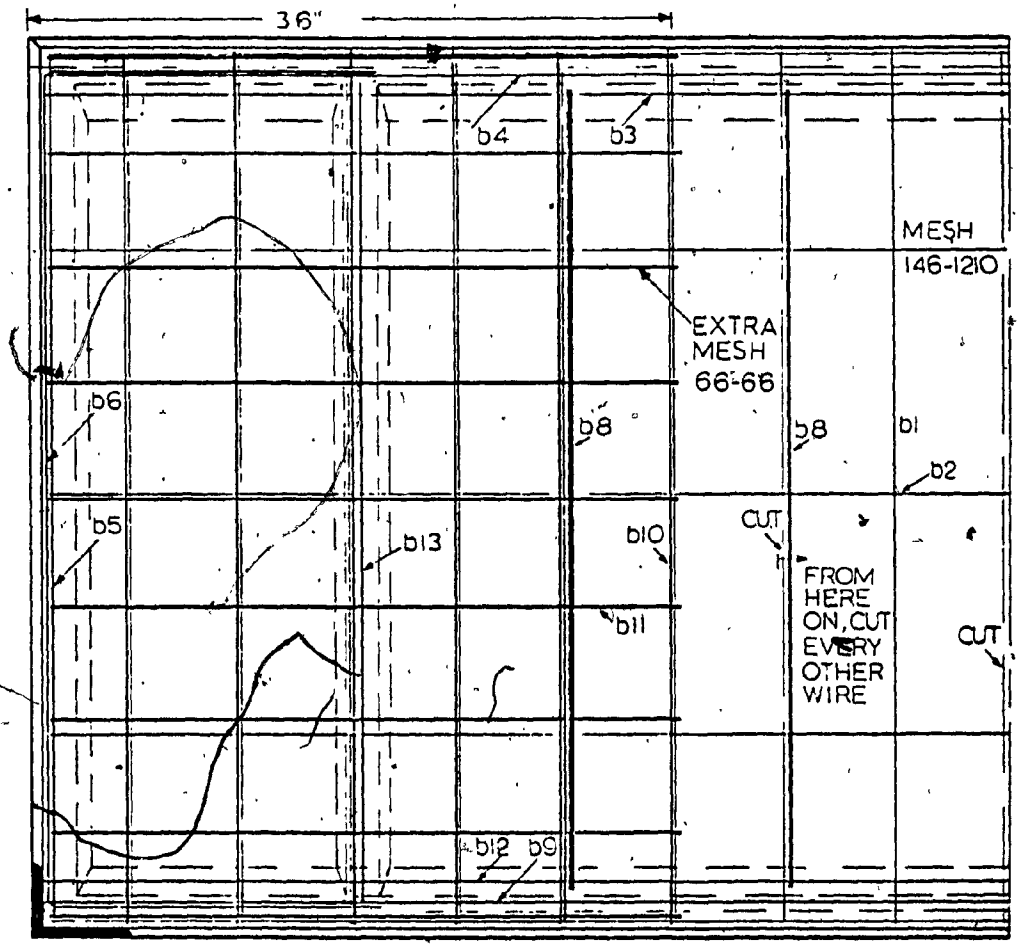

CUT- WHOLE WIRE TO BE CUT OFF

Figure 2.6
Details of Reinforcement Panel 168-10 (H4)

BAR Nº	TYPE & SIZE OF BARS	Nº OF BARS	LENGTH OF BAR, in	F_y ksi.
b1	mesh 146 - 1210	17 cut 6	46.25	
b2		5	122.5	
b3	#2	1	122.5	40
b4	#3	1	119.5	40
b5	#2	2	46.25	40
b6	#2	2	82.25	40
b7	#2		10.75	40
b8	#4	2	65.25	40
b9	#5	1	108	60
b10	mesh 66-66	6	134	
b11		9	35.5	
b12	#5	1	108	60
b13	#2	2	56.75	40

Figure 2.6a
Details of Reinforcement Panel 168-10 (H4)

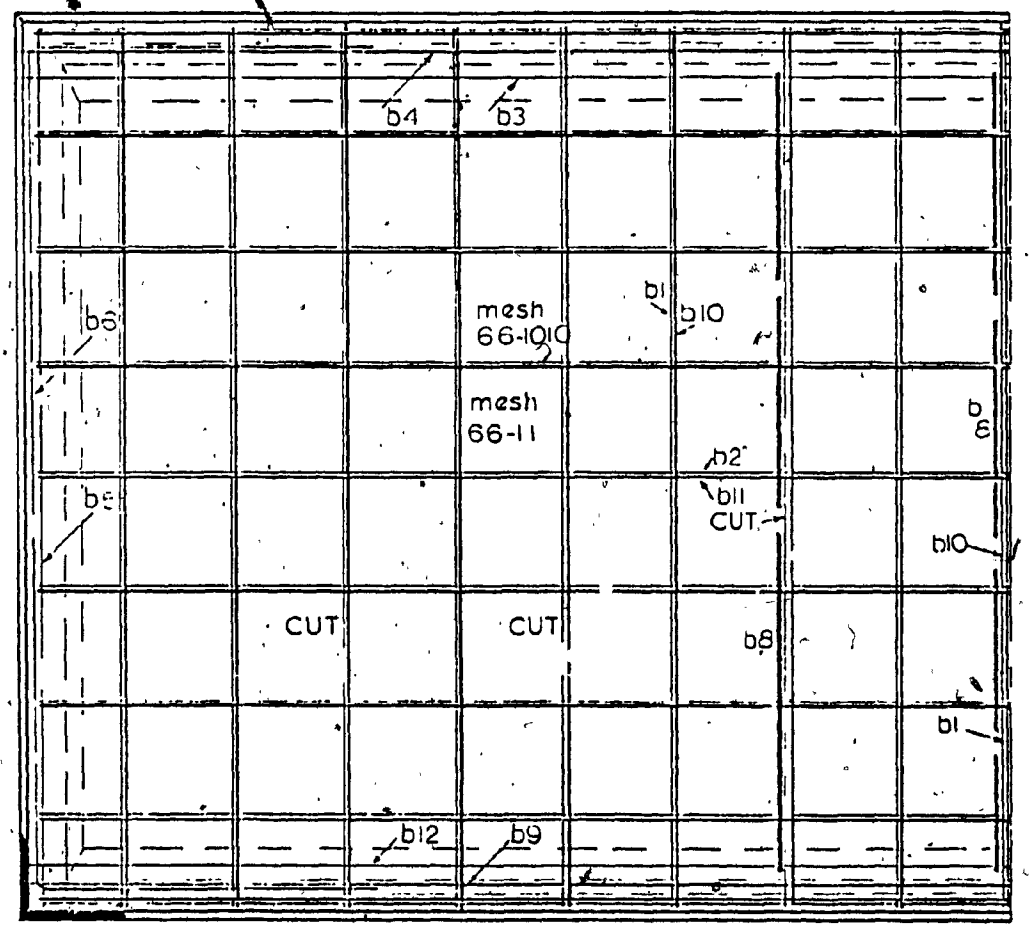

CUT - WHOLE WIRE TO BE CUT OFF

Figure 2.7
Details of Reinforcement Panel 168-7 (H5)

BAR Nº	TYPE & SIZE OF BARS	Nº OF BARS	LENGTH OF BAR, in	F_y ksi.
b1	mesh 66-66	17	46.25	
b2		9	122.5	
b3	#3	1	122.5	40
b4	#4	1	119.5	40
b5	#2	2	46.25	40
b6	#2	2	82.25	40
b7	#2	38	107.5	40
b8	#6	3	65.25	60
b9	#9	1	108	60
b10	mesh 66-66	17	46.25	
b11		9	122.5	
b12	#9	1	108	60

Figure 2.7a
Details of Reinforcement Panel 168-7 (H5)

CHAPTER 3

TEST OBSERVATIONS, AND RESULTS

TEST RESULTS

The following observations were made during the tests.

1. Failure loads (Table 3.1)
2. Instant of crack appearance and propagation under increasing load. (Figs.).
3. Displacements in the horizontal (z-axis) and vertical (y-axis) directions Table 3.2 & 3.3.
4. Mode and locations of failure.

3.1 Failure Loads

Failure loads and loading schemes of each panel tested are given below.

TABLE 3.1 TEST SCHEDULE AND RECORDED STRENGTHS

TEST NO.	PANEL MARK REINFORCEMENT DETAILS	LOADING SCHEME	f'c PSI	FAILURE LOAD P_f KIPS
1	168-9 H1	e	5259	200
2	168-11 H2	c	5073	226
3	168-8 H3	c	5306	270
4	168-10 H4	c	4698	275
5	168-7 HS	c	5023	309

e: eccentrically loaded
c: concentrically loaded

3.2 OVERALL BEHAVIOR AND CRACK PROPAGATION

Panel 168-9 (H1), was loaded eccentrically and it failed at a load of 200K . Corresponding to an eccentricity of 2 1/2 in. measured from the center of gravity, it can be estimated that the panel failed at an imposed moment of 41.67 K. ft.First crack occurred at a load of 46K Longitudinal cracks and separation of the side ribs from the wall membrane occurred at the top quarter of the panel. The panel had some existing shrinkage cracks which kept on widening and extending along. Some horizontal cracks occurred at 114K and 200K.

Panel 168-11 (H2), was concentrically loaded. The failure load was 226 K. Vertical as well as horizontal cracks occurred on the panel. There was a separation of ribs form the wall membrane. The top half part of the panel twisted and inclined on one side a small angle from the vertical. Twisting probably resulted by a weakened rib on this side which was slightly damaged during handling. Separation of the longitudinal ribs from the slab membrane was insignificant compared with panel 168-9, probably because of the presence of cross ribs.

Panel 168-8 (H3), was loaded concentrically. The failure load was 270 K. Most cracks occurred along the perimeter of the slab at junctions with longitudinal ribs. Failure occurred at the top,at the intersection of the rib and the

wall membrane.

Panel 168-10 (H4) loaded concentrically failed 275 K. As panel 168-11, it had two internal cross ribs. At the connection of the cross ribs a few cracks, but no separation along the perimeter ribs occurred. Separation of edge ribs from membrane occurred at failure at the bottom.

Panel 168-7 (H5), was the most heavily reinforced. It had a window opening of 2 ft. x 2 ft. Failure load was 309 K, the highest of all the panels. Cracks were vertical. Failure occurred around the window opening extending up to the edge ribs. There was a change of curvature on one side of the panel.

3.3 MODE OF DEFLECTION

Generally maximum deflections occurred at the center of most panels and deformed along single curvature in the direction of wall slab. Panels having internal cross ribs showed smaller deflections both in the horizontal and vertical directions and deformed with double curvature. In all cases panels failed at the intersection of the ribs and the slab at the top or bottom where there was a sudden change of cross section.

3.4 GENERAL OBSERVATIONS ON MODE AND LOCATION OF FAILURE

Common to all panels was the fact that all deflected in one direction, outwards in the direction of the wall

membrane. This phenomenon is a result of the unsymmetric channel shape of the cross section. Most failures occurred at junctions of bottom or top ribs with the slab, where the cross section changes and at corners in areas of concentration of stresses.

Heavier reinforced panels failed at higher loads. Panels containing internal cross ribs(stiffening ribs), developed pronounced seperation of cross ribs from the wall membrane and most of the failures occured around the ribs. Two such panels tested showed similar horizontal displacements and deformations as can be seen in Figs. 3.4, 3.6-7, 3.10-11.

The window panel developed vertical cracks extending from bearing ribs at the top and bottom to the corners of the window. A combined stress state of compression and tension above and below the window resulted in concrete failure around that area.

The eccentrically loaded panel failed at the lowest load as compared to other panels and demonstrated the largest vertical displacements.

Crack pattern drawings of panels are shown in Figs. 3.14-3.18. The numbers marked on crack patterns represent loads in kips at which cracks were noticed. Dashed lines represent cracks due to shrinkage and handling. Areas of failure are shown by hatched lines.

Photographs of cracked panels are shown in Appendix C.

TABLE 3.2: RECORDED HORIZONTAL DISPLACEMENTS AT OR BEFORE FAILURE FOR CENTER POINT.

PANEL MARK	DEFLECTIONS x 10^{-3} in											
	LEFT SIDE				CENTER				RIGHT SIDE			
	L_1	L_2	L_3	L_4	C_1	C_2	C_3	C_4	R_1	R_2	R_3	R_4
168-9 (H1)	431	289	+229	+183	-52	-295	-277	-261	-45	-244	-288	-228
168-11 (H2)	-73	-97	-76	-91	-189	-188	-166	-83	-137	-236	-225	-122
168-8 (H3)	-275	-167	-147	-75	-167	-316	-326	-331	-47	-290	-438	-311
168-10 (H4)	191	264	64	206	142	106	125	41	-10	-31	-15	-89
168-7 (H5)	-264	-218	-237	-156	-237	-292	-269	-143	-277	-174	-104	-26

TABLE 3.3: OVERALL VERTICAL DISPLACEMENTS RECORDED $x10^3$ in.

MARK \ LOAD KIPS	46	69	92	114	137	160	183	206	229	275	309
168-9 H1	179	238	282	317	339	413	385				
168-11 H2	43	53	63	71	79	87	94	103			
168-8 H3	28	44	55	69	78	92	106	120	144		
168-10 H4	20	49	63	77	89	104	111	121	129	140	
168-7 H5	160	180	192	198	203	209	217	224	231	238	244

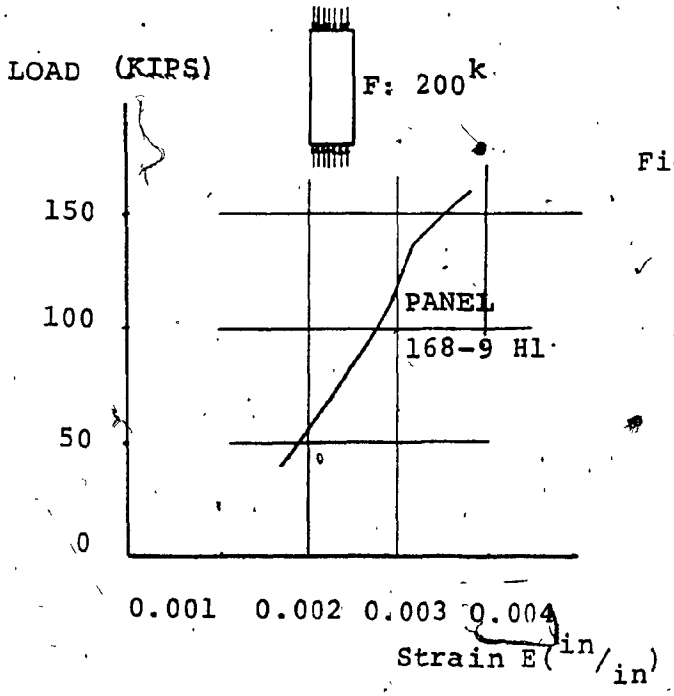

Fig. 3.1: Vertical Displacements of Eccentrically Loaded Panel.

Fig. 3.2 : Horizontal Displacements and Deformations of

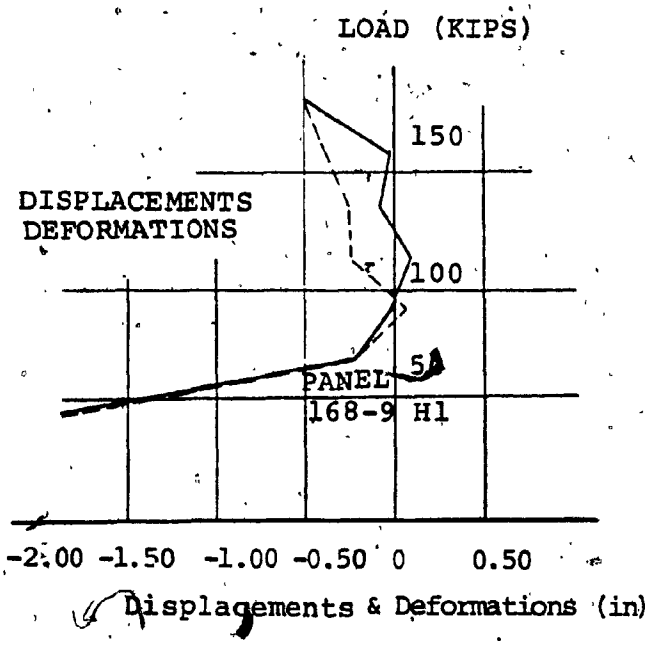

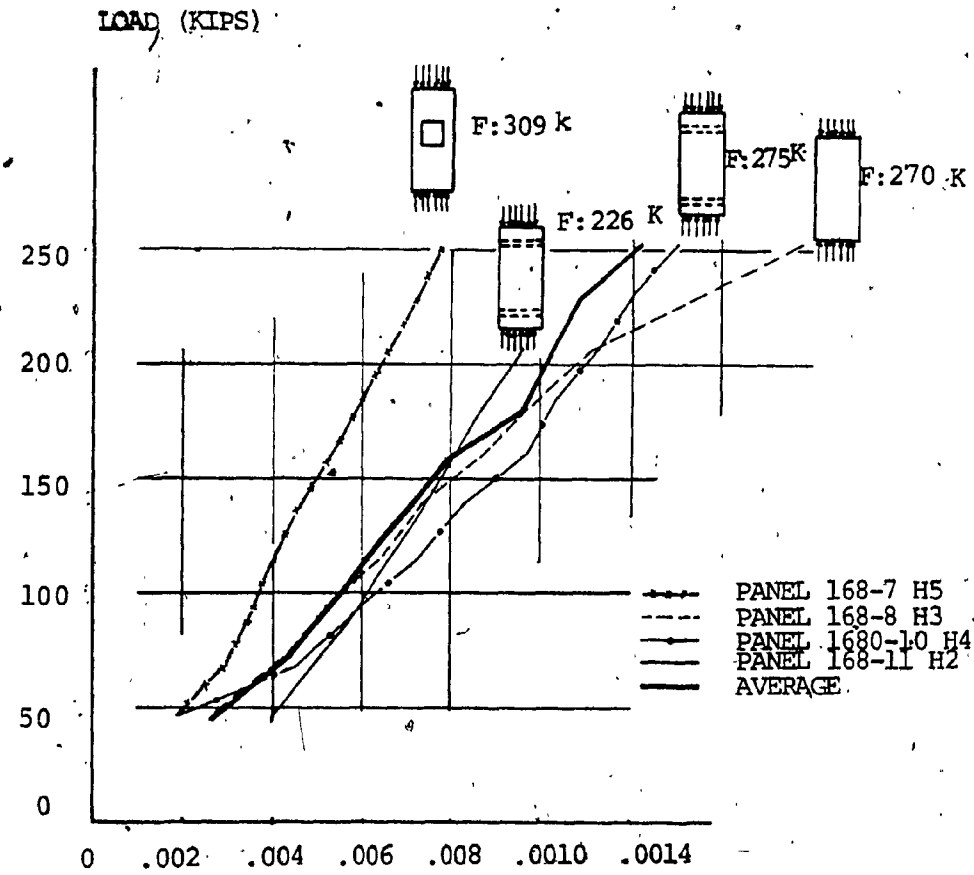

Fig. 3.3

Vertical Concentrically loaded Panels.

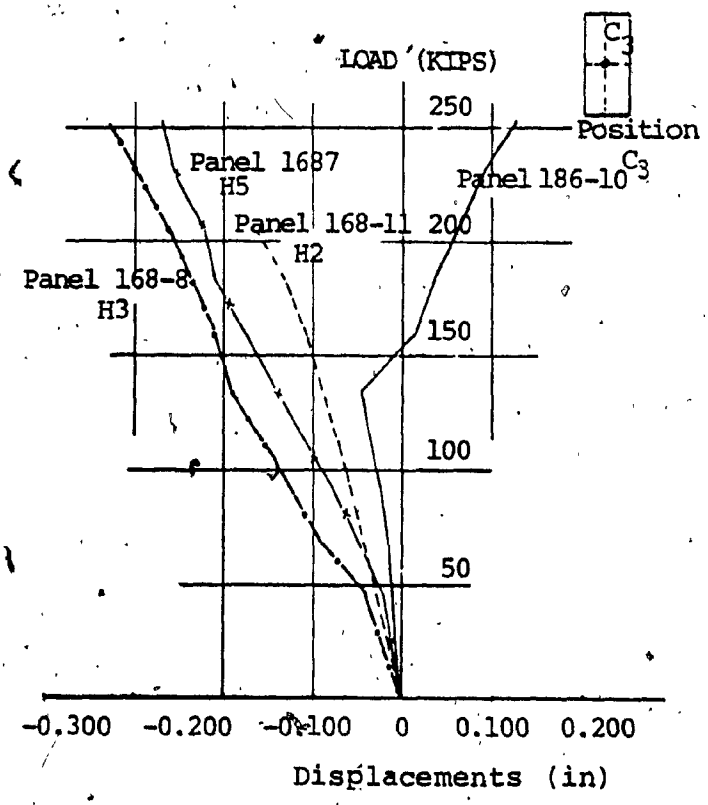

Fig. 3.4

Horizontal of Point C_3.

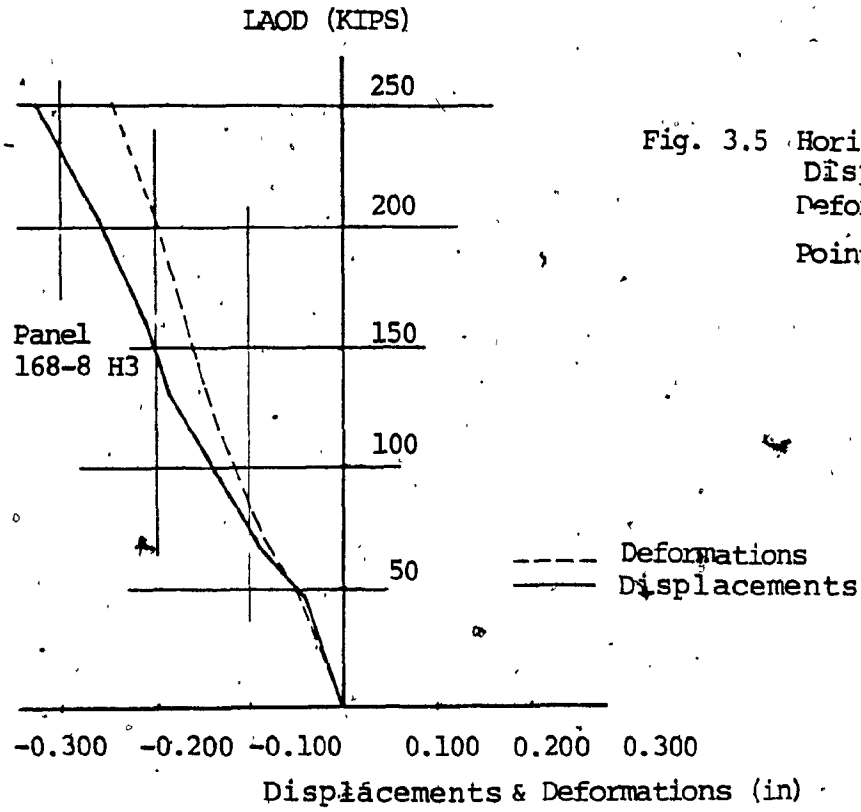

Fig. 3.5 Horizontal Displacements and Deformation of Point C_3.

Fig. 3.6

Horizontal Displacements Deformation of Point C_3.

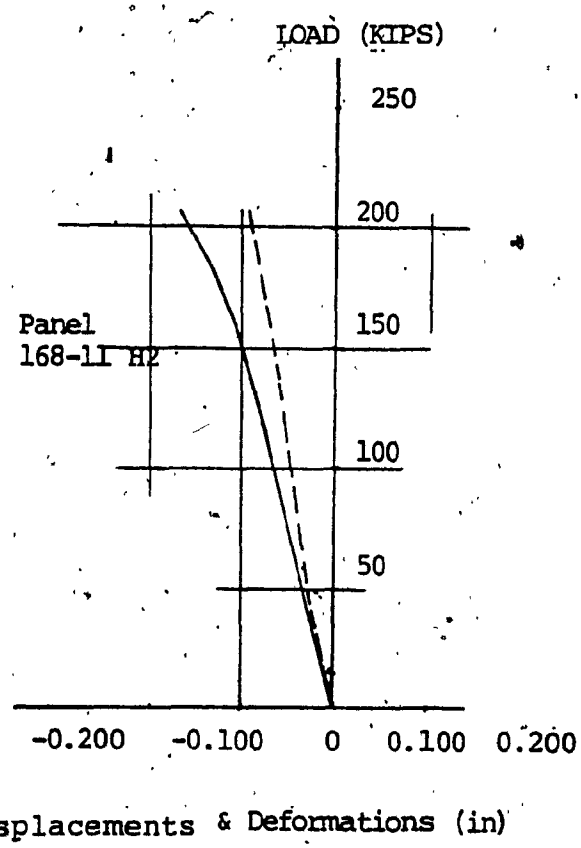

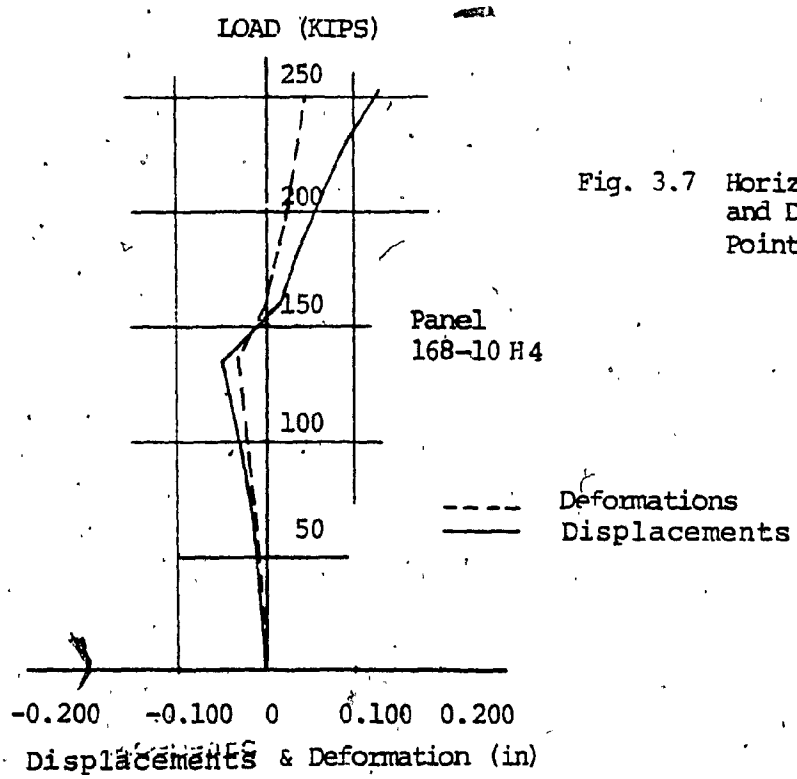

Fig. 3.7 Horizontal Displacements and Deformation of Point C_3.

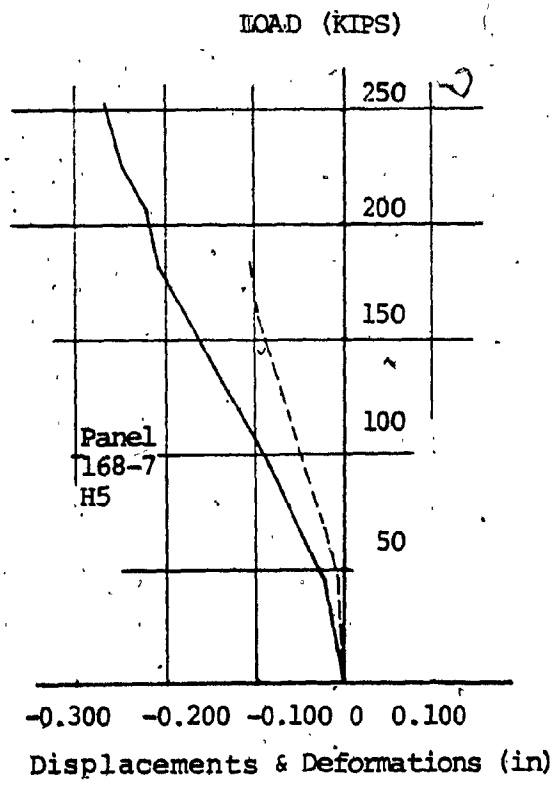

Fig. 3.8

Horizontal Displacements and Deformation of Point C_3

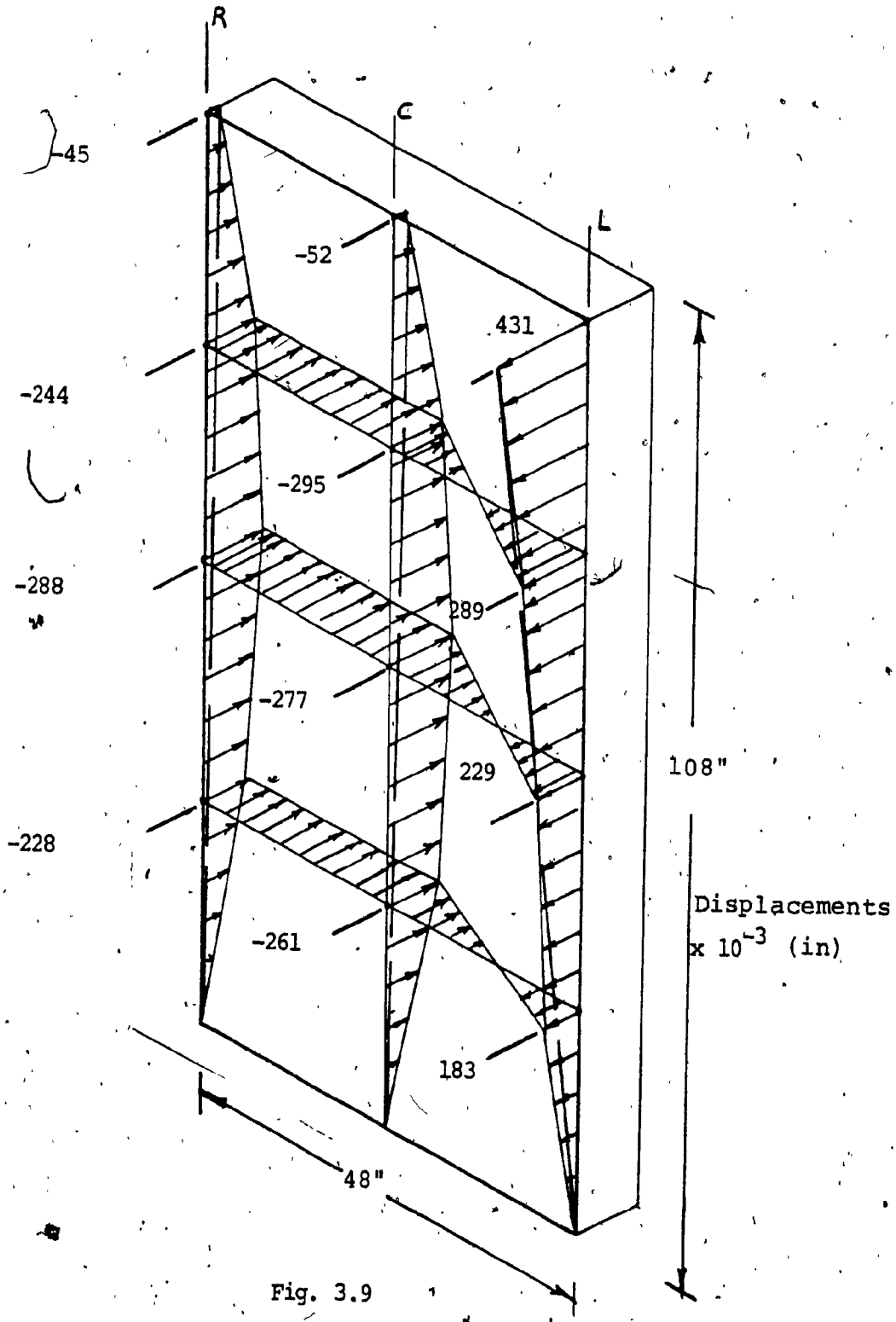

Fig. 3.9

Displacaments and deformations Panel 168-9 (H1).

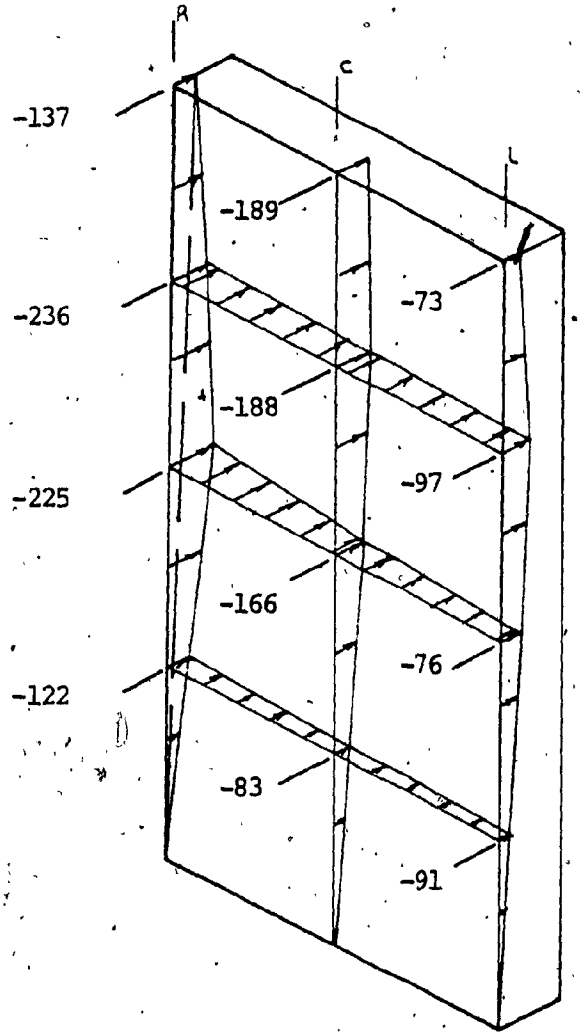

Fig. 3.10 Overall Displacements and deformations Panel 168-9 (H1).

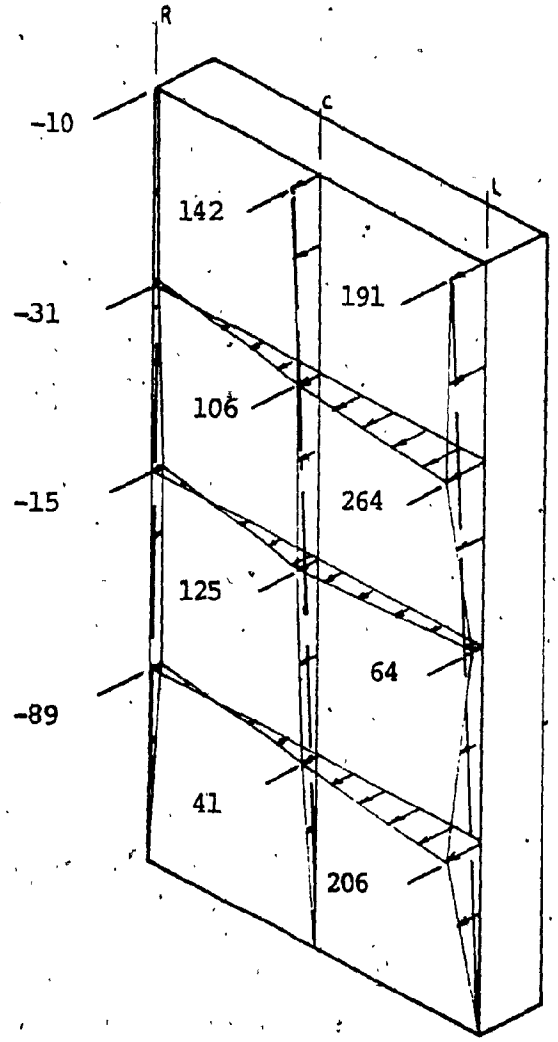

Fig. 3.11

Overall Displacements deformations Panel 169-9 (H1)

Displacements x 10^{-3} (in)

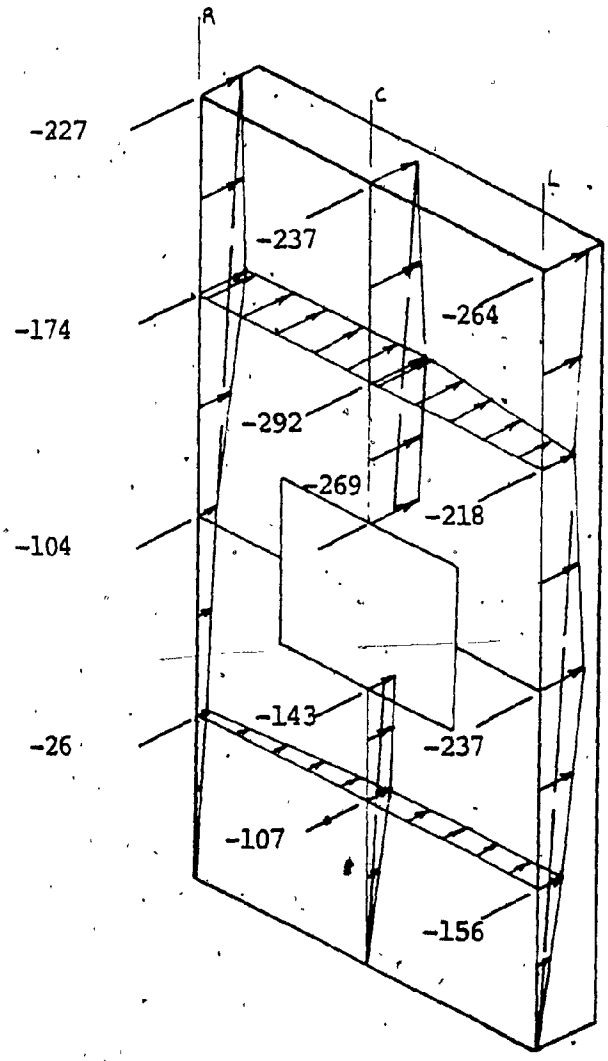

Fig. 3.12 Overall Displacements and deformations Panel 168-7 (H5)

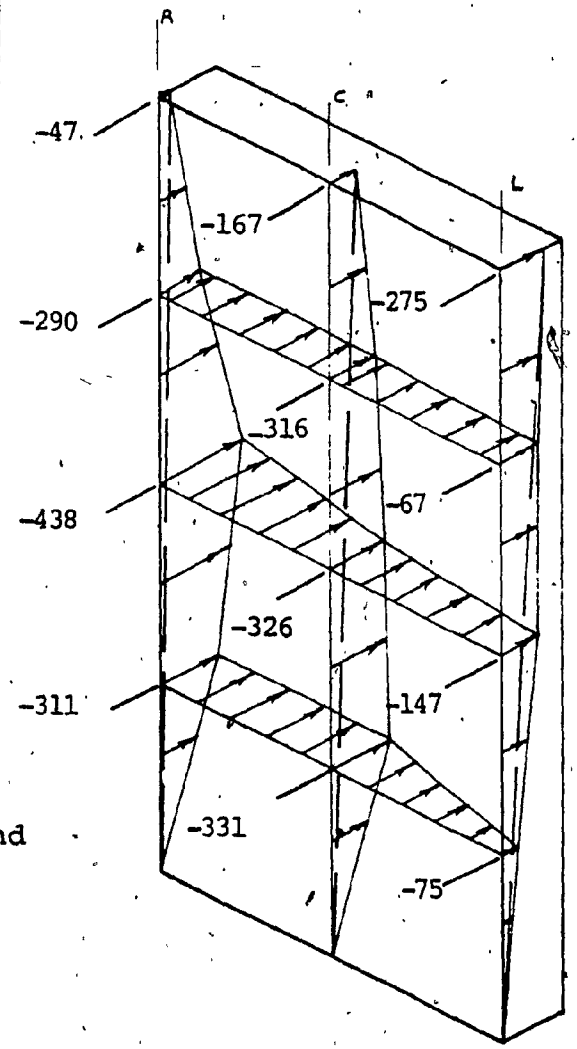

Fig. 3.13
Overall Displacements and deformation Panel 168-7 (H5).

Displacements x 10^3 (in)

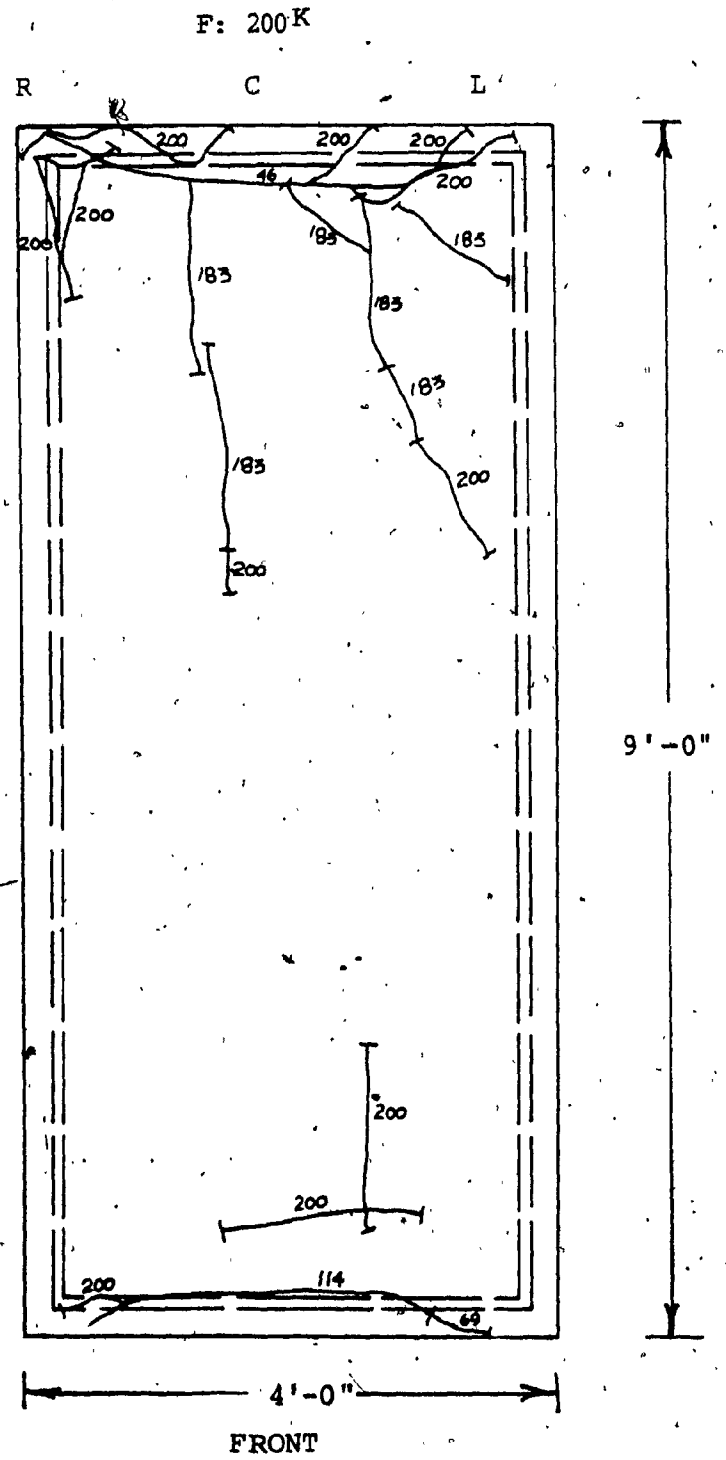

Fig. 3.14 Crack Pattern Panel 168-9

NOTE :Numbers correspond to loads in Kips

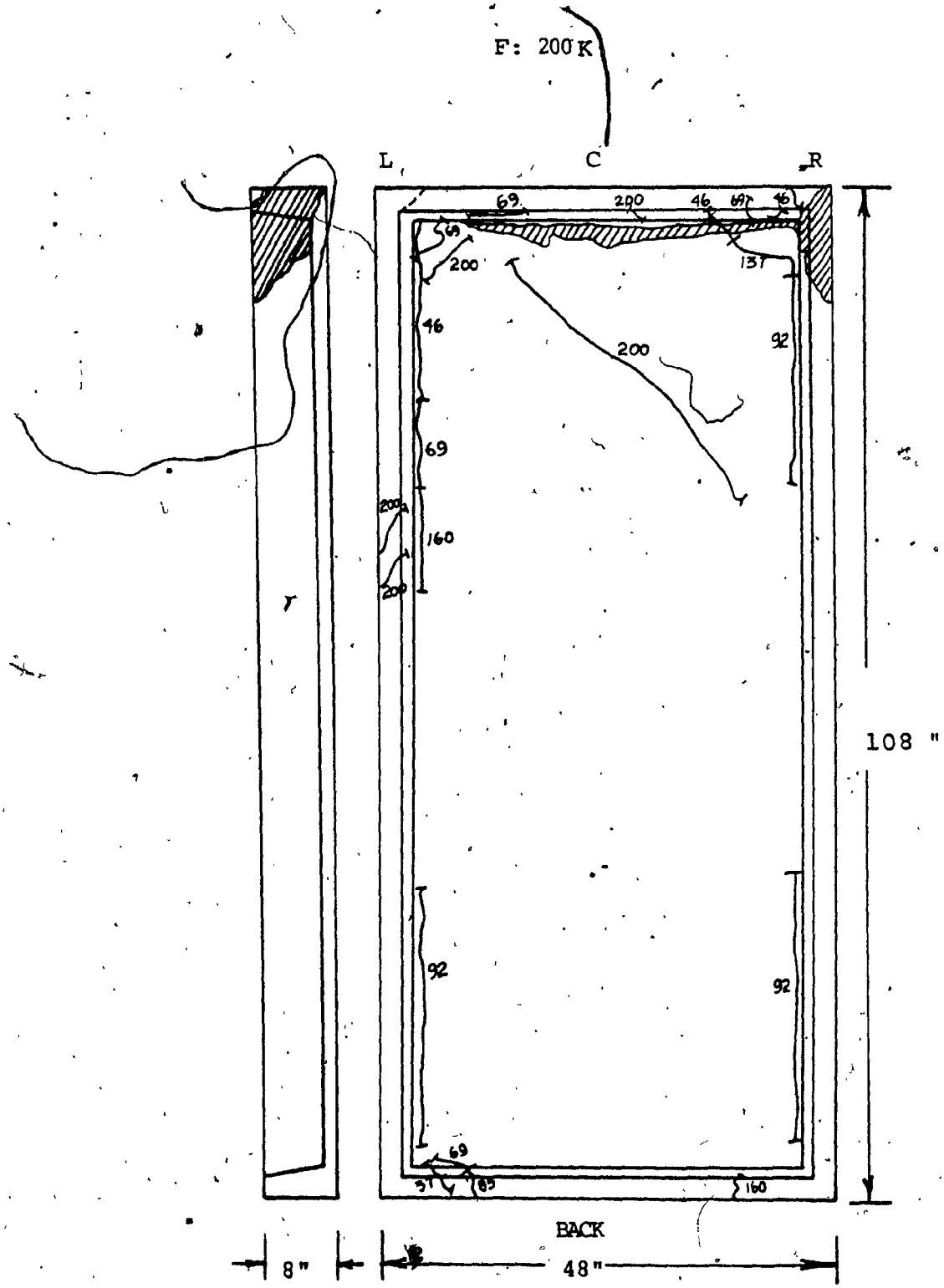

Fig. 3.14 Crack Pattern Panel 168-9

F: 226 K

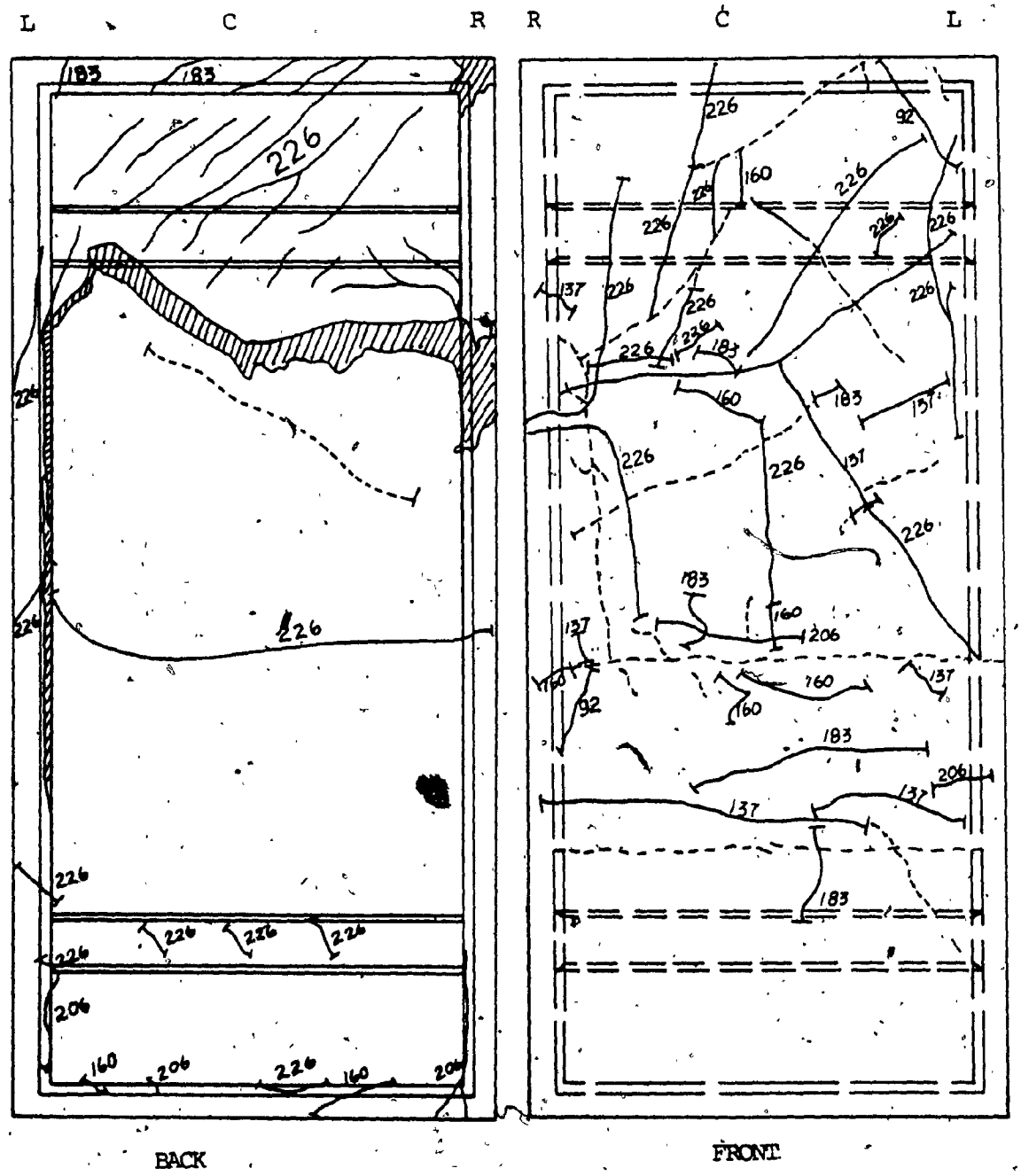

Fig. 3.15 Crack Pattern Panel 168-11 (H2)

F: 270K

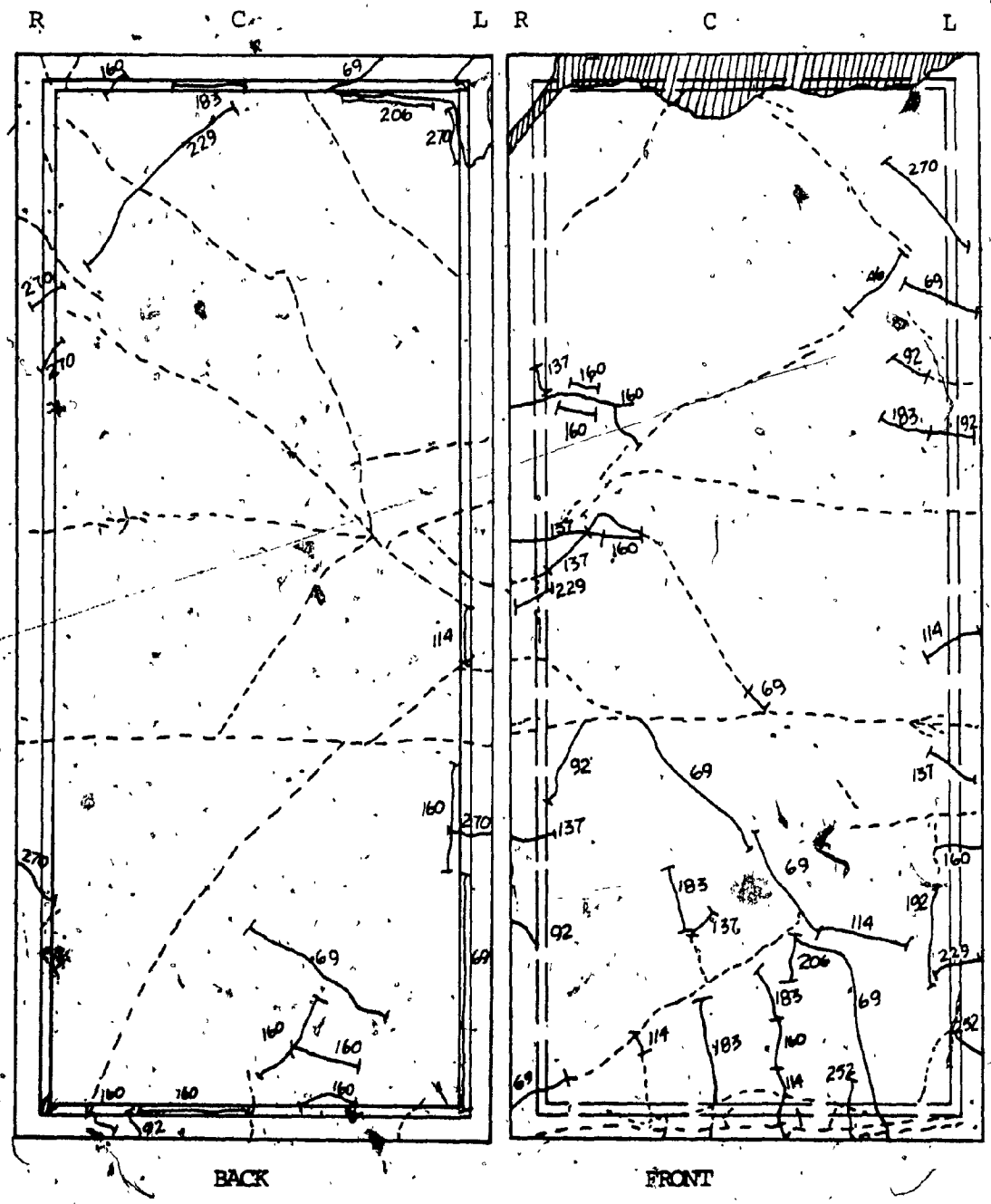

Fig. 3.16 Crack Pattern Panel 168-8, H3

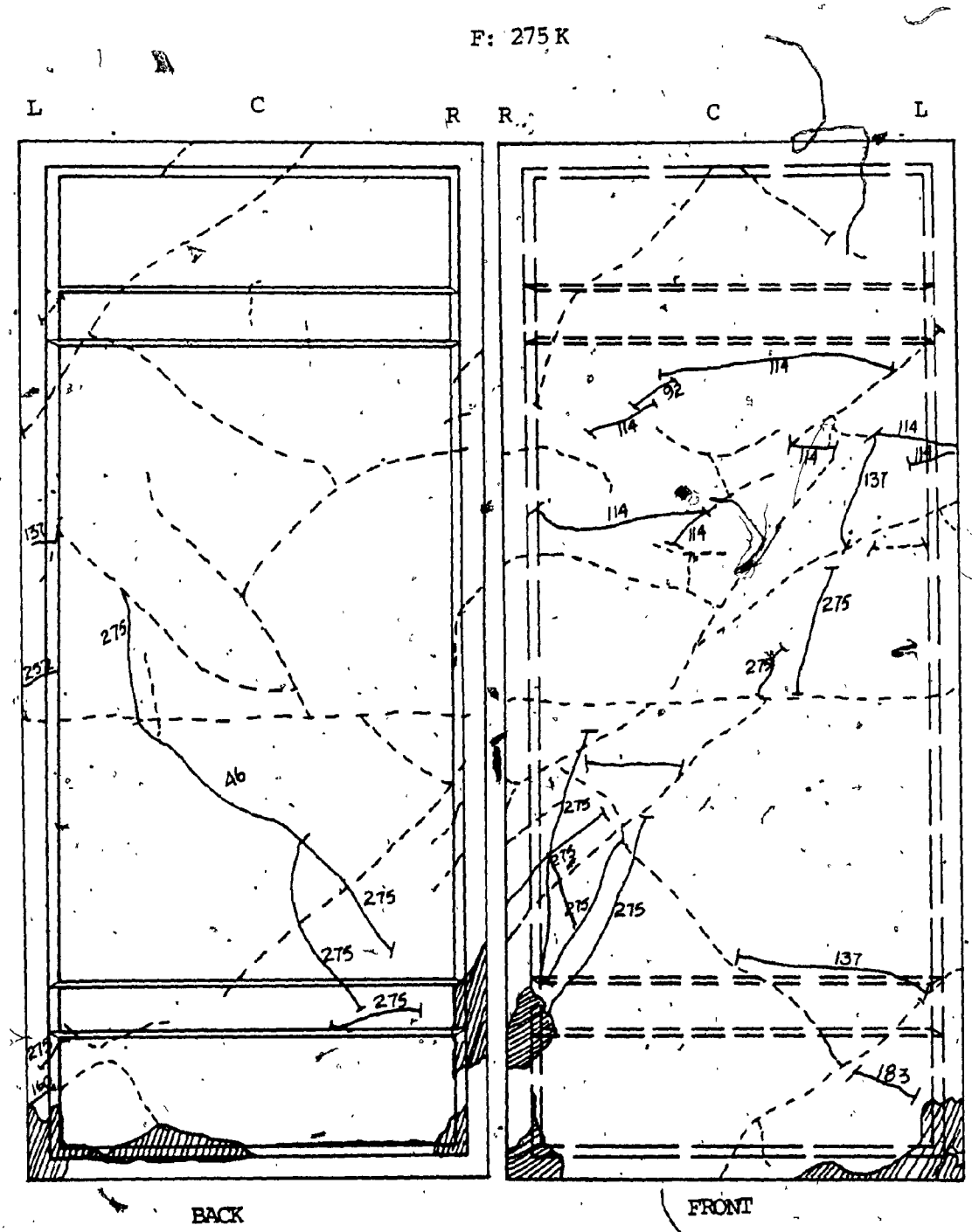

Fig. 3.17 Crack Pattern Panel 168-10 H4

F: 309K

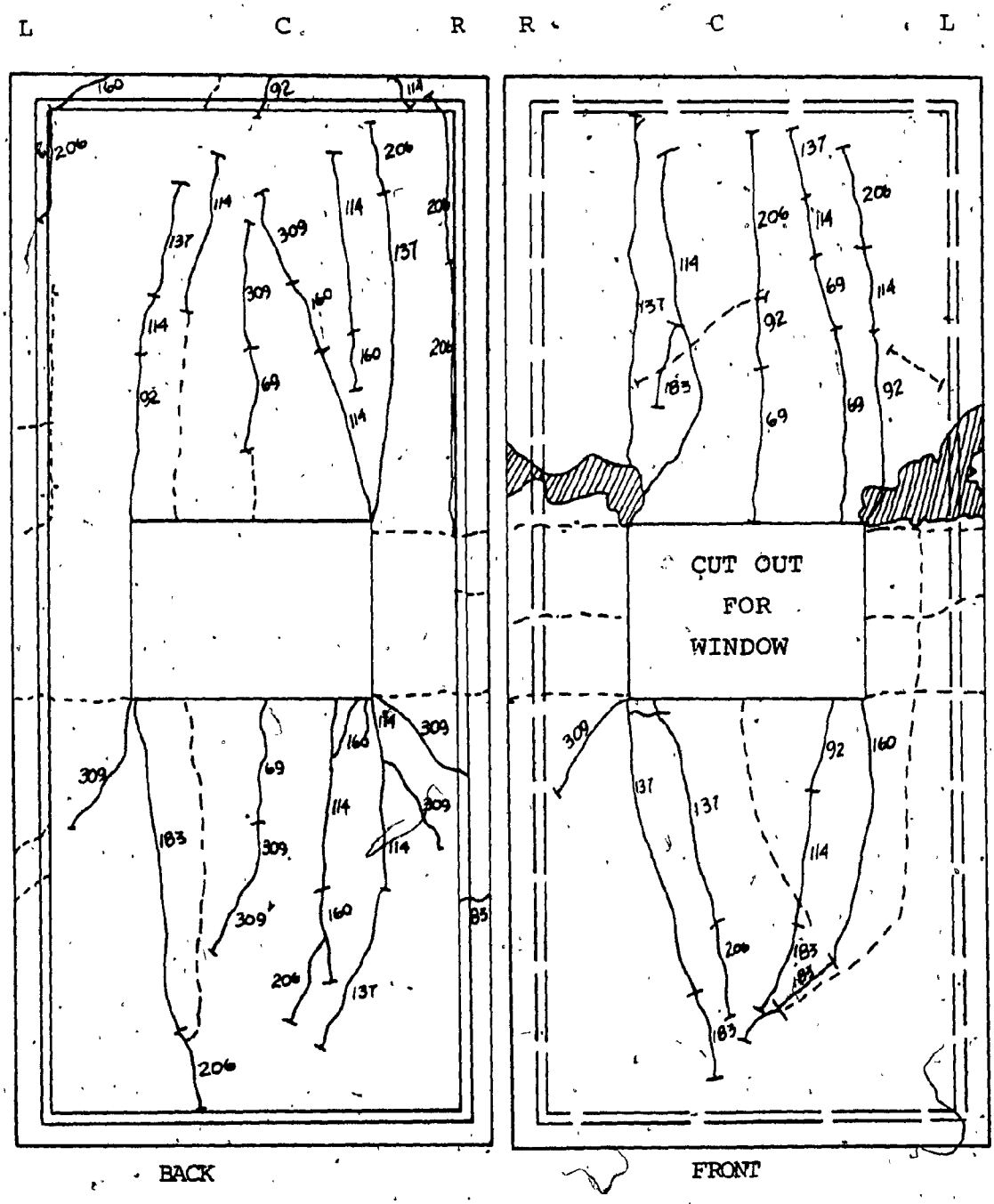

Fig. 3.18 Crack Pattern Panel 168-7 H5

CHAPTER 4

ANALYSIS OF TEST RESULTS

ANALYSIS OF TEST RESULTS

4.1 Concentrically Loaded Panels

Since 1971 the "strength design method" adopted by ACI Building Code used the wall design equation [4.2], for the principal design procedure, allowing for the design of wall elements as columns, and defining "reasonably concentric loads" as those applied within the middle third of the cross section.

The equation was considered as a product of two functions.

$$\frac{P_u}{\phi f'_c \, bh} = F_1 \times F_2 \qquad [4.1]$$

where $F_1 = 0.55$, and is function of eccentricity

$F_2 = [1-(\frac{l_c}{40h})^2]$, and is a function of slenderness.

Section 14.2.3 of the ACI 318-77 Building Code Requirements for Reinforced Concrete (7) expresses the wall design equation as:

$$P_u = 0.55 \, \phi \, A_g f'_c \, [1 - (\frac{l_c}{40h})^2] \qquad [4.2]$$

It should be noted that equation [4.2] does not take into account the presence of steel. In the case of thin wall panels, because of smaller cross sectional area, contribution of steel may be more important and should

not be neglected. Thus, equation [4.2] was modified to take into account the presence of steel, given by:

$$P_u = 0.55\ \phi\ A_g f'_c\ [1 - (\frac{l_c}{40h})^2]\ [1 + (m-1)p_m + (n-1)p_n] \qquad [4.3]$$

where

P_u = factored vertical load on wall

f'_c = specified compressive strength of concrete

A_g = cross-sectional area.

l_c/h = height to thickness ratio of the wall

m = f_y/f'_c yield strength ratio of steel to concrete

p_m = ratio of yielded steel area to gross area

n = E_s/E_c modular ratio

p_n = ratio of non yielded steel area to gross area

ϕ = capacity reduction factor.

The modified equation was used to calculate the carrying capacities of the concentrically loaded panels. In equation 4.3 the ratio of modulii of elasticity n for non yielded reinforcement and yield strength ratio m for yielded reinforcement will be assumed. The ratios were incorporated in the equation on the basis that maximum strain reached from concentrically loaded panels was 0.0016 in/in.

The computed values were compared to test results. The ratios of failure loads to computed carrying capacities, shown in table 4.1-2 result in ratios greater than the capacity reduction factor of 0.7 (recommended by ACI 318-77).

The carrying capacities of the panels were also calculated with direct application of equation 4.2, neglecting the presence of steel. The resulting capacity reduction factors, shown in table 4.1-2 are higher than values obtained with the modified equation. Thus, it may be noted, that the equation may be safely applied for the case of thin wall panels of properties comparable to those studied in this research. Detailed calculations are shown in Appendix A and B.

TABLE 4.1 COMPARISON OF FAILURE LOADS WITH CALCULATED VALUES FOR CONCENTRICALLY LOADED PANELS.

PANEL MARK	P_u (Eqn 4.5) KIPS	P_u (Eqn 4.2) KIPS	P_f KIPS	$P_f/P_u=\emptyset$ (Eqn 4.3)	$P_f/P_u=\emptyset$ (Eqn. 4.2)
168-11 H2	285	253	226	0.80	0.89
168-8 H3	282	265	270	0.96	1.02
168-10 H4	250	235	275	1.10	1.17
168-7 H5	294	251	309	1.06	1.23

4.2 Eccentrically loaded Panels

Panel 168-9 marked as H1 failed at 200K Due to its unsymmetrical shape, by placing the load on its geometric centre resulted in a small eccentricity. The carrying capacity of this panel was calculated considering the compatibility of strains of steel and concrete.

Because of small eccentricity the whole section was in compression, therefore contribution of steel was calculated on strain compatibility basis. The rib side was under maximum compression, hence it was assumed that extreme fibres reach ultimate strain of 0.003.

TABLE 4.2 Comparison of Failure loads with Calculated Values: Eccentrically loaded.

Panel MARK	P_u KIPS	P_f KIPS	$P_f/P_u = \phi$
168-9 H1	238	200	0.84

CONCLUSIONS

From experimental and analytical results the following conclusions may be drawn.

(1) The design method for walls recommended by ACI (318-77) may be safely applied to the design of thin walled panels of comparable properties to panels studied. Such panels may have $w/t \leq 32$ and an overall width to length ratio of $h/l_c \leq 1/13.5$. The method, using equation 14.1 of the ACI Code of Practice or the modified equation presented herein, is applicable to both axially loaded panels and panels having small structural eccentricity. In this case, eccentricity resulted since the center of gravity of the bearing foot did not coincide with the center of gravity of the panel itself.

(2) For panels tested, steel is significant and should be considered in the design practice.

(3) Panels which have a membrane on one side, deflect in the membrane direction. The displacements are larger in eccentrically loaded panels. Recorded displacements up to failure were relatively small in the range of h/247 to h/331.

(4) First cracks which occurred on panels without cross ribs occurred at 114K to 137K loads. On panels without ribs, including the one with the cut out for window, cracks occurred at smaller loads of 46K and 69K. Under increasing load and increasing displacements in the direction of the

mebrane,existing centrally located shrinkage cracks were expanding.

(5) Generally all panels failed at the intersection of the membrane with edge ribs,except in the case of the panel with the window opening where failure occurred at window corners,where there were abrupt changes in cross section and concentration of stresses.Panels having cross ribs developed pronounced seperation from the wall membrane and failure occurred around ribs.

(6) The research reported,did not study the stability aspects of these panels. These formed the subject of other research carried out concurrently and results are presented in a separate paper (8).

(7) It should be noted here that conclusions given in this report are based on a limited number of model tests. There are other aspects influencing sterngth of thin wall panels which are not investigated and could be considered as a topic for further research.These include variation of reinforcement,influence of dimensional relationships and shape size and distribution of ribs.

REFERENCES

1. ACI Committee 318, "Building Code Requirements for Reinforced Concrete (ACl 318-77)", American Concrete Institute, Detroit, 1977.

2. Zielinska, Cz. and Zielinski, Z.A., "Prefabrication Systems for Low Cost Housing International Conference on Industrial Building Processes, Proceedings, West Virginia University, 1972.

3. Zielinska, Cz. and Zielinski, Z.A., "Survey on Development and Behaviour in Time of Thin Wall Ribbed Panel Buildings Under Extreme Climate Conditions, Housing Science, Vol. 2, No. 6, pp. 499-509, 1978.

4. Zielinski, Z.A. and Abdulezer, A., "Ultimate Strength in diagonal Splitting of Reinforced Concrete Thin Wall Panels", Canadian Journal of Civil Engineering, Vol. 4, 100.2, pp. 226-239, 1977.

5. Taner, N. Fazio, P.P., Zielinski, Z.A., "Strength and Behaviour of Beam Panels Tests and Analysis", J. American Concrete Institute, Vol. 79-98, October, 1977, pp. 511-520.

6. Kripanarayonon, K.M., "Interesting Aspects of the Emperical Wall Design Equation," J. American Concrete Institute, Vol. 74-20, May, 1977, pp. 204-207.

7. Oberlender, G.D. and Everard, N.J., "Investigation of Reinforced Concrete Walls,:J. American Concrete Institute, Vol. 74-28, June, 1977, pp. 256-263.

8. Zielinski, Z.A., Troitsky, M.S., El-Chakieh, E., "Bearing Capacity of Reinforced Concrete Thin-Wall Panels," Eighth Canadian Congress of Applied Mechanics, Proceedings, University of Moncton, 1981.

APPENDIX A

CONCENTRICALLY LOADED

PANELS: DESCRIPTION, MATERIALS, AREAS, STRENGTHS

APPENDIX A

A.1 Panel, Description, Materials, Areas.

A.1.1 PANEL 168-11 (H2)

f'_c = 5073 psi
A_g = 102.44 m^2
l_c = 108 in.
h = 8 in.

Reinforcement — **BARS**

1#5	f_y = 60 psi	A_s = 0.31 in^2
1#8	f_y = 60 psi	A_s = 0.79 in^2
1#3	f_y = 40 psi	A_s = 0.11 in^2
1#4	fY = 40 psi	A_s = 0.20 in^2

MESHES

6x6-10/10	f_y = 83,449.9 psi	A_s = 0.10 in^2
6x6-11	f_y = 76,364.6 psi	A_s = 0.44 in^2

A.1.2 PANEL 168-8 (H3)

f'_c = 5306
A_g = 102.44
l_c = 108 in.
h = 8 in.

Reinforcement — **BARS**

2#5	f_y = 60 psi	A_s = 0.62 in^2
1#2	f_y = 40 psi	A_s = 0.05 in^2
1#3	f_y = 40 psi	A_s = 0.11 in^2

MESHES

142-1220	f_y = 85,314.7	A_s = 0.0715 in^2
6x6-6/6	f_y = 72,884.8	A_s = 0.203 in^2

A.1.3. PANEL 168-10 (H4)

f'_c = 4698 psi

SAME REINFORCEMENT AS PANEL 168-8

A.1.4 PANEL 168-7 (H5)

f'_c = 5023 psi
A_g = 102.44
l_c = 108 in.
h = 8"

Reinforcement BARS

2#9	f_y = 60 psi	A_s = 2.0 in^2
1#3	f_y = 40 psi	A_s = 0.11 in^2
1#9	f_y = 40 psi	A_s = 0.20 in^2

MESHES

2-6x6-6/6 f_y = 72,884.3 psi A_s = 0.41 in^2

A.2 Panel Strengths (using equation 4.3)

In equation 4.3 P_u is the design value used. Since the ultimate $P_u = P_{u/\phi}$, ϕ may be evaluated from ratio P_{f/P_u} where P_f is the failure load.

$$\therefore \quad \phi = \frac{P_f}{\bar{P}_u}$$

A.2.1 Panel 168-11 (H2)

$$P_u = 0.55(5073)(102.44)\left[1-\left(\frac{108}{40x8}\right)^2\right]\left[1+\left(\frac{40,000-1}{5073}\right)\frac{0.31}{102.44} + (7.07-1)\frac{1.64}{102.44}\right]$$

$P_u = 283^K$, $\bar{P}_u = 283\ \phi$

$P_f = 226^K$

$\phi = P_f/\bar{P}_u = \frac{226}{283}$

$\phi = 0.80$

A.2.2 Panel 168-8 (H3)

$$P_u = 0.55(5306)(102.44)\left[1-\left(\frac{108}{40x8}\right)^2\right]\left[1+\left(\frac{40,000-1}{5306}\right)\frac{0.16}{102.44} + (6.91-1)\frac{0.895}{102.44}\right]$$

$P_u = 281^K$, $\bar{P}_u = 281\ \phi$

$P = 270^K$

$\phi = P_f/\bar{P}_u = \frac{270}{281}$

$\phi = 0.96$

A.2.3 Panel 168-9 (H4)

$$P_u = 0.55(4698)(102.44)[1-(\frac{108}{40x8})^2][1+(\frac{40.00}{4698}-1)\frac{0.16}{102.44}$$

$$+(7.34-1)\frac{0.895}{102.44}]$$

$P_u = 250$ K ; $\bar{P}_u = 250$ Ø

$P_f = 275$ K

Ø $= P_f/\bar{P}_u = \frac{275}{250}$

Ø $= 1.10$

A.2.4 Panel 168-7 (H5)

$$P_u = 0.55(5023)(102.44)[1-(\frac{108}{40x8})^2]\ [1+(\frac{40,000}{5023}-1)\frac{0.31}{102.44}$$

$$+\ (7.10-1)\frac{2.41}{102.44}]$$

$P_u = 292$ K ; $\bar{P}_u = 292$ Ø

$P_f = 309$ K

Ø $= P_f/\bar{P}_u = \frac{309}{292}$

Ø $= 1.06$

A.3 Panel Strengths (using equation 4.2)

Using Eqn 4.2 which neglects the presence of steel the capacity reduction factor is evaluated by calculating P_u. Since $\bar{P}_u = \frac{P_u}{\phi}$

$$\phi = P_f/P_u$$

A.3.1 Panel 168-11 (H2)

$$P_u = 0.55(5073)(102.44)\left[1-\left(\frac{108}{40x8}\right)^2\right]$$

$$P_u = 253K; \ \bar{P}_u = 253\ \phi$$

$$Pf = 226K$$

$$\phi = P_f/\bar{P}_u = \frac{226}{253}$$

$$\therefore \ \phi = 0.89$$

A.3.2 Panel 168-8 (H3)

$$P_u = 0.55(5306)(.02.44)\left[1-\left(\frac{108}{40x8}\right)^2\right]$$

$$Pu = 265K; \ \bar{P}_u = 265\ \phi$$

$$P_u = 270K$$

$$\phi = P_f/P_u = \frac{270}{265}$$

$$\therefore \ \phi = 1.02$$

A.3.3 Panel 168-9 (H4)

$$P_u = 0.55\ (4698)(102.44)\left[1-\left(\frac{108}{40x8}\right)^2\right]$$

$$P_u = 235K\ ;\ \bar{P}_u = 235\ \emptyset$$

$$P'_u = 275K$$

$$\emptyset = P_f/\bar{P}_u = \frac{275}{235}$$

$$\therefore\ \emptyset = 1.17$$

A.3.4. Panel 168-7 (H5)

$$P_u = 0.55(5023)(102.44)[102.44)\left[1-\left(\frac{108}{40x8}\right)^2\right]$$

$$P_u = 257K\ ;\ \bar{P}_u = \frac{251}{\emptyset}$$

$$P_u = 309K$$

$$\emptyset = P_f/\bar{P}_u = \frac{309}{251}$$

$$\therefore\ \emptyset = 1.23$$

APPENDIX B

ECCENTRICALLY LOADED

PANEL: DESCRIPTION, MATERIALS, AREAS & STRENGTH

APPENDIX B

B.1 Panel Description, Materials, Areas

B.11 Panel 168-9 (H1)

$f'_c = 5269$ psi
$A_g = 102.44$ in^2
$l_c = 108$ in.
$h = 8$ in.

Reinforcement **BARS**

1#3	$f_y = 40,000$	$A_s = 0.11$ in^2
1#4	$f_y = 40,000$	$A_s = 0.20$ in^2
1#6	$f_y = 40,000$	$A_s = 0.44$ in^2
1#8	$f_y = 60,000$	$A_s = 0.79$ in^2

MESHES

6x6-1/1	$f_y = 76,364.6$ psi	$A_s = 0.44$ in^2
6x6-6/6	$f_y = 72,884.3$ psi	$A_s = 0.20$ in^2

B.2 Panel Strength

Equivalent Section

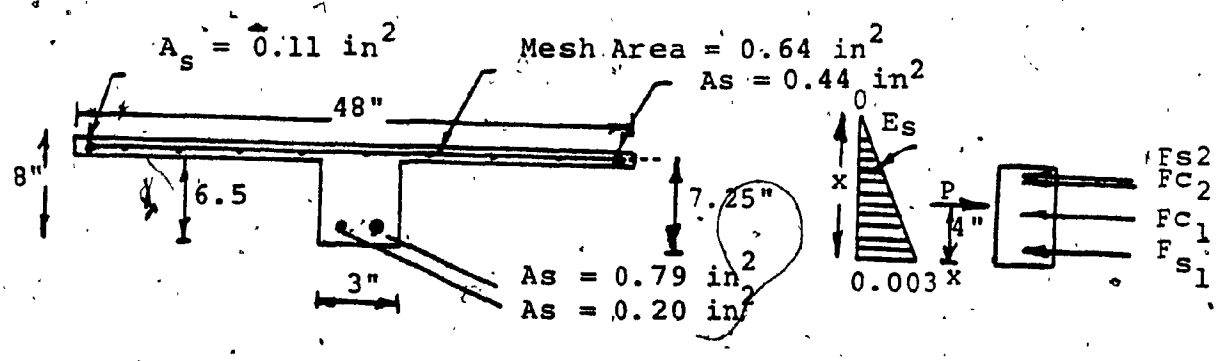

$B_1 = 0.787$

$\therefore a = 0.787\,x \qquad \epsilon s/0.003 = \frac{X-7.25}{X} \qquad \therefore F_{s_2} = \epsilon_s \cdot A_s \cdot E_s$

$Fc_1 = 0.85\ f'_c\ a_1 b_1$

$Fc_2 = 0.85\ f'_c\ a_2 b_2$

$Fs_1 = A_{s1}\ f_{y1} + A_{s2}\ f_{y2}$

$Fs_2 = \varepsilon_s . E_s . A_s$

$\therefore\ Fc_1 = 0.85(5259(6)(0.787(x-6.5)\ \ \therefore\ Fc_2 = 147.76x-1220.35$ kip

$Fc_2 = 0.85(5.259)(42)(0.787-6.5)$

$\therefore\ Fc_2 = 147.76x-1220.35$ kip

$Fs_1 = 0.20(40) + 0.79(60)$

$\therefore\ Fs_1 = 55.40$ kip

$Fs_2 = .003 \times 1.193 \times 29 \times 10^3 [\frac{x-7.25}{x}]$

$\therefore\ Fs_2 = 103.79\ [\frac{x-7.5}{x}]$ kip

$\sum M_o = 0$

$$P(x-4) = Fs_2(x-7.25)+Fs_1(x-0.75)+Fc_1(\frac{0.787x}{2}) + Fc_2(\frac{x-(0.78x-6.5)}{2})$$

$$P(x-4) = 103.79\frac{(x-7.25)^2}{x} + 55.40(x-0.75) + 21.11\ x\frac{(x-0.78x)}{2} + 147.76x-1220.35(\frac{-0.787x+6.5)}{2}$$

$$P(x-4) = \frac{28.54x^2 + 509.44\ x + \frac{5455.25}{x} - 5512.66}{(x-4)} \qquad [B-1]$$

$\sum F = 0$

$$P = 21.11x+(147.76x-1220.35)+55.40+103.79\ [\frac{x-7.25}{x}]$$

$$\therefore\ P = 168.87X - 1061.16 - \frac{752.48}{x} \qquad [B-2]$$

Equating [B-1] & [B-2] yields the following equation.

$$140.33x^3 - 2246.04x^2 + 9004.82x - 2445.34 = 0 \qquad \text{[B-3]}$$

Solving the above equation:

$$x = 9.322''$$

Since $a = 0.787\ x$

$a = 0.787\ (9.323)$ $\qquad a = 7.337''$

∴ 'a' falls in the slab.

from eq$^{\underline{n}}$ [B-2] ; substituting for x:

$$P = 168.87(9.323) - 1061.16 - \frac{752.48}{9.323}$$

$$P = 432.50^K$$

Multiplying the above l d by a factor of 0.55 to take into consideration eccentricity;

$$Pu = 0.55\ P$$

$$= 0.55\ (432.50)$$

$$Pu = 238^K$$

Since $\bar{P}_u = \frac{P_u}{\phi}$ and $P_f = 200^k$

$$\therefore \phi = P_f/\bar{P}_u = \frac{200}{238}$$

$$\therefore \phi = 0.84$$

APPENDIX C

TEST PANEL PHOTOGRAPHS

Figure C1
Loading Sheme

Figure C2
Overall View of the
Loading Sheme

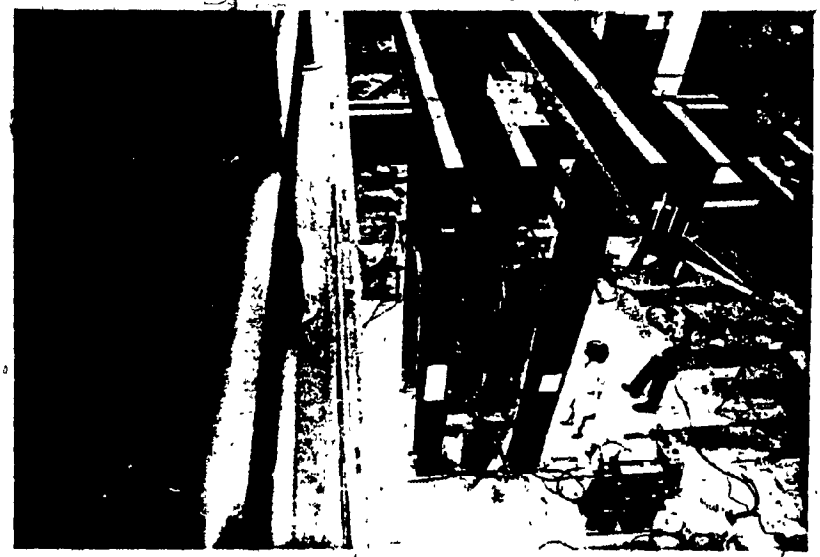

Figure C3
Overall View of the Loading Frame

Figure C4
Back View of Panel 168-9 (H1)
(At Failure)

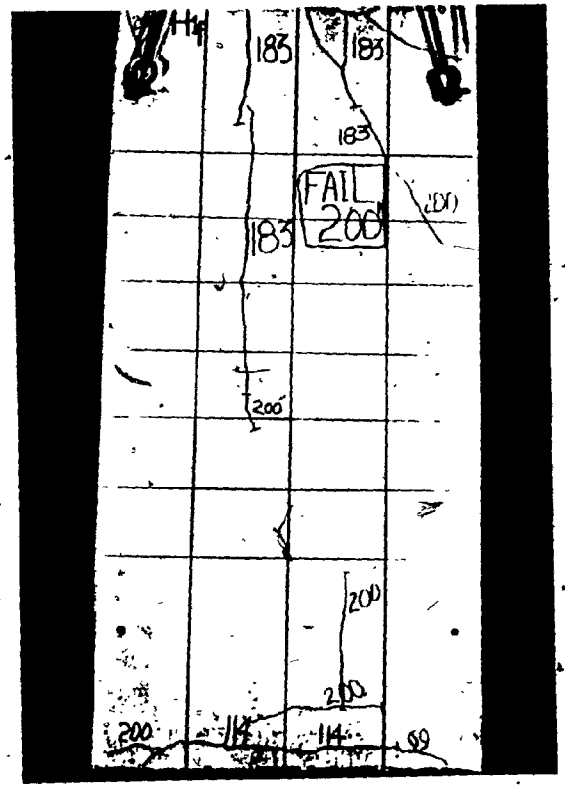

Figure C5
Front View of Panel 168-9 (H1)
(At Failure)

Figure C6
Back View of Panel 168-11 (H2)
(At Failure)

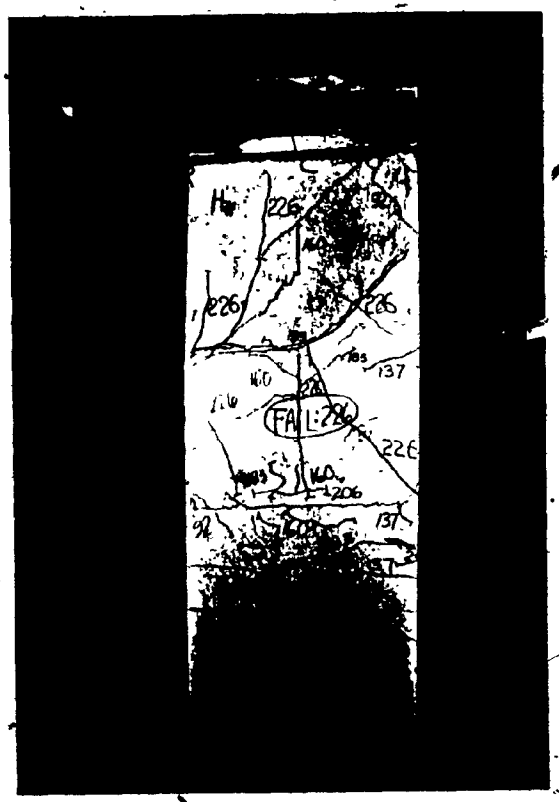

Figure C7
Front View of Panel 168-11 (H2)
(At Failure)

Figure C8
View of Panel 168-11 (H2) in Test Frame
(At Failure)

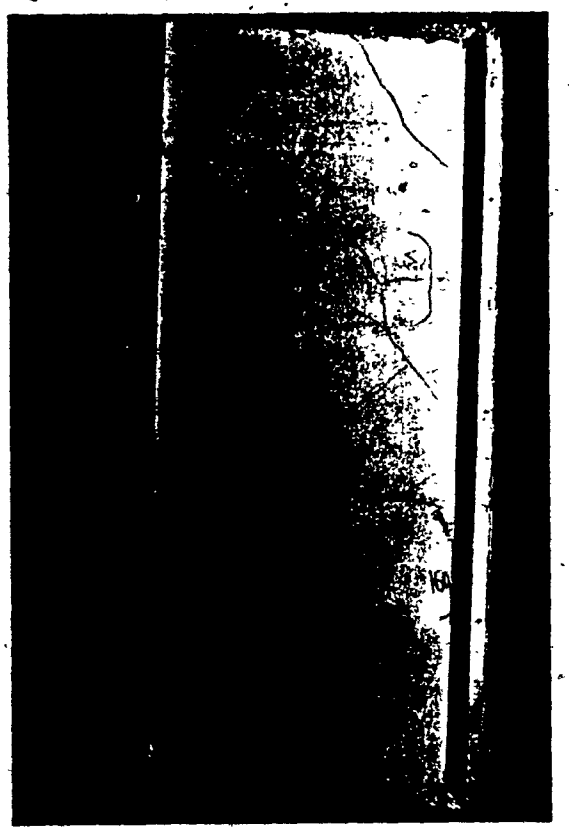

Figure C9
Back View of Panel 168-8 (H3)
(At Failure)

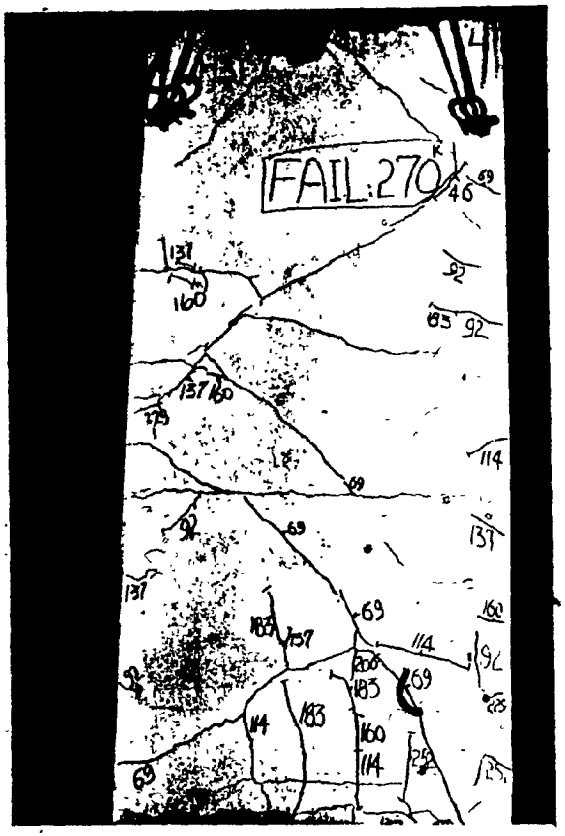

Figure C10
Front View of Panel 168-8 (H3)
(At Failure)

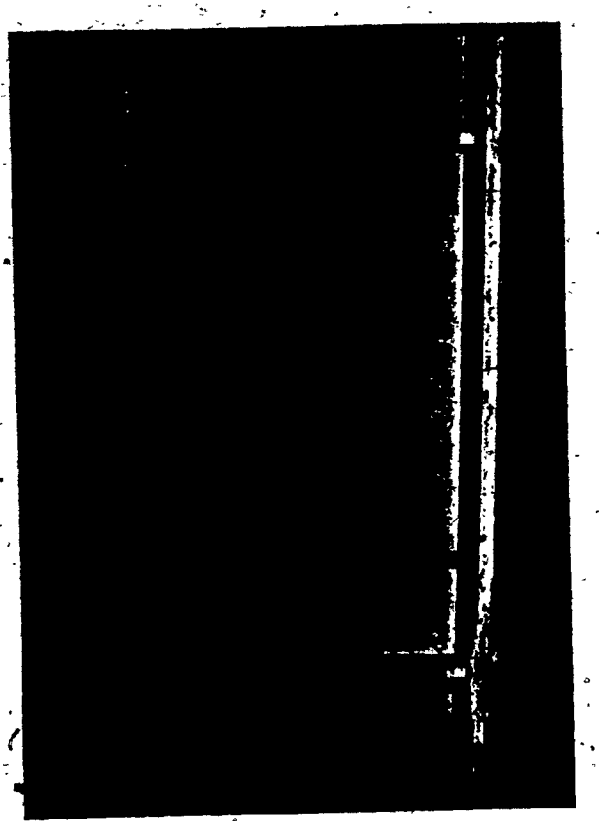

Figure C11
Back View of Panel 168-10 (H4)
(At Failure)

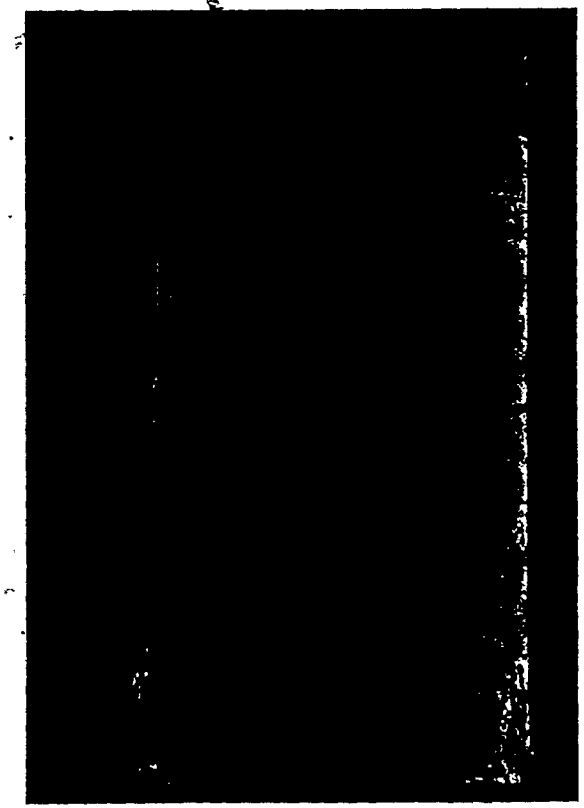

Figure C12
Front View of Panel 168-10 (H4)
(At Failure)

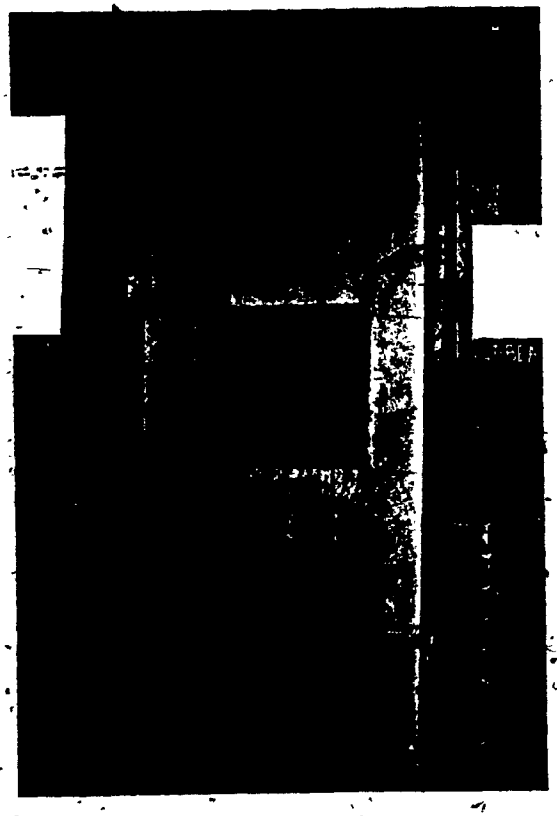

Figure C13
Back View of Panel 168-7 (H5)
(At Failure)

Figure C14
Front View of Panel 168-7 (H5)
(At Failure)