The Use of Computer-Based Simulations to Update and Enhance CEGEP Electronic Laboratory Exercises.

Daniel Ekonjo Mulema

A Thesis

in

The Department

of

Education

Presented in Partial Fulfilment of the Requirements
for the Degree of Master of Arts at
Concordia University
Montréal, Québec, Canada

December 1991

ISBN 0-315-73698-4

ABSTRACT

The Use of Computer-Based Simulations to Update and Enhance CEGEP Electronic Laboratory Exercises.

Daniel Ekonjo Mulema

This study examines the use of traditional hands-on circuit construction and testing, versus a computer electronic circuit simulation programme OrCAD/PSPICE, comparing the two strategies separately, as well as possible combinations of the two, for a course on Operational Amplifiers. Two classes were observed in their use of simulations and hands-on hardware laboratories. Questionnaires concerning entry-level knowledge skills, transfer and application of concepts, and attitudes towards computer-simulations were administered to these classes. There was no significant difference between the two groups in terms of entry-level knowledge, and the transfer and application of concepts. The use of the specific simulation packages provided was evaluated very positively. The students were all able to use the simulations effectively. They strongly endorsed the use of simulations to augment, but not to replace, hands-on laboratory work in all electronics courses.

ACKNOWLEDGEMENTS

It is with deep gratitude and immense appreciation that I take to acknowledge all those whose help and encouragement made the completion of this thesis possible.

I would like to extend my sincere appreciation to my colleague Ms. Ida Zielinska, the students and staff of Dawson College Electrotechnology Department (particularly Mr. Angus Macleay), Mr. V. Agelidis and Dr. G. Joos, for their profound contribution towards the completion of this study.

I would also like to acknowledge that this project was made possible through a research grant by the Ministry of Higher Education and Scientific Research (MESS) Programme Formation des Formateurs.

My sincere thanks and appreciation goes to my supervisor Professor Gary Boyd, to whom I am indebted for his valuable help and advice, which helped me most at times when I seemed to be making no headway in the writing of this thesis.

Lastly I would like to thank my wife (Ann) for her understanding and moral support for some of the sleepless nights when the "chips" were down.

DEDICATION

To my parents,

For all their hard work and efforts to foster my education.

I can not thank you enough.

With all my love,

Dann.

CONTENTS

LIST OF FIGURES

LIST OF TABLES

CHAPTER 1

INTRODUCTION

The ever-increasing advancement in micro-chip technology in recent years has been accompanied by an equally accelerated adoption and utilization of micro-computers in the curricula of schools, colleges and universities. Although initially some teachers as well as educational analysts have viewed this trend with some apprehension, concerning its effects on the role of the teacher in the classroom, the use of computer systems is receiving increasing acceptance in educational and human service agency environments. Public schools and post secondary institutions have been willing to accept computer systems as a logical means to assist students by enhancing the process for making career choices. However, the underlying problem not only rests with acquiring the hardware, it extends to the expertise of the teachers in terms of the available software programmes. Teachers must be proficient with the use of such software packages for their use to be effective. In this regard effective implementation in the educational system will help prepare our youth for the diverse career opportunities that the future holds. One must not fail to understand the fact that the cost of computer resources is relatively high, with respect to other school materiel. For this reason schools have to provide adequate expertise in the form of trained teachers who would ensure maximum benefits from such an investment.

Furthermore, teachers are accustomed to being confident and in control. They may not take kindly to being challenged by a "box", particularly when some of the students in their classrooms know more about how to make the computers

work than they do. The teacher who obtains adequate computer education training will use the computer for more applications other than just as a word processor or computer science education. It is one thing to buy such expensive machines, but it is another thing to realize that they are not being used to full capacity due to lack of knowledge and lack of adequate software and courseware.

Nevertheless, the art of communication is a process which is not only concerned with the passing of information, but also with how an individual receives and processes that information. As communicators, teachers are potentially the most sensitive, flexible and divergently responsive components in any instructional system. Under the limitations of conventional teaching, however, they seldom have the time or opportunity to concentrate their efforts on what they do best, such as:

1. diagnosing individual learner's difficulties;
2. interacting with learners when they need help on a one-to-one basis or in small group discussions;
3. inspiring and motivating; and
4. identifying, encouraging creativity and self-direction (Johnson and Johnson, 1972).

This being the case, in designing CAL systems one needs to take into consideration the specific instructional objectives in observable or measurable terms. This should then be followed by the diagnostic analysis of the students' entry capabilities, the optimal sequencing of course content, and the definition of relevant criterion referenced measures of achievement.

1.1 Problem Statement

Though much has been written about CAI as an information display and testing system, the advent of the computer has made possible a new and exciting form of learning environment, which is the dynamic simulation. We now have the technology for a powerful form of instruction that is both dynamic and interactive and that can provide considerable variety within a simulated environment. Computer-based simulations can provide efficient, effective and highly motivational instruction that can readily serve the need for individualization (Reigeluth & Schwartz, 1989). Furthermore, simulations can also be used to enhance the transfer of learning, by teaching complex tasks in an environment that approximates the real world setting in certain important ways.

It is necessary for electronic technologists to obtain first hand experience of apparatus and components. This is made possible traditionally in the laboratory. However, the range of equipment and operating conditions that can be provided by any one institution is severely limited due to a lack of space, cost and safety. As documented by Smith & Pollard (1986), in many fields of engineering where systems are just too expensive or too hazardous to be made available in the laboratory, the only experience available to students is through simulations e.g., flight simulators for pilot training that save multi-million dollars over acquiring an aircraft for the same purpose. However, it is usually believed to be truly essential that hands-on experience be provided to students, to give them a feel for the processes of measurement and a familiarity with the different actual equipment. With this reservation one can settle for the possibility that

computer simulations can be used to make significant contributions in situations such as these: where a conventional experiment is either extremely difficult or impossible; where experimental apparatus is either not readily available or too complicated or expensive for general laboratory use; where actual experimental work could be dangerous; where a conventional experiment would take an unacceptably long time to complete (Ellington et al., 1981).

The most important potential application of simulation therefore, in the teaching of science is as a supplement, to complement the laboratory exercises in a more direct way whereby the students simulate a circuit on the computer and then build and test it, then compare and contrast the results obtained from the two procedures. In this study we will be investigating how the approach recommended by Johnson and Johnson (1972) can be implemented, with the use of simulations in two three hour laboratory exercises aimed at second year CEGEP students at Dawson College.

Following the above stated scenario, the problem at hand is:

"**How preferable are computer-based simulations (i.e. OrCAD/PSPICE) in comparison with actual "breadboard" practices in enhancing and updating CEGEP electronic laboratory exercises?**".

1.2 Rationale for this Study

Some students in first year electronics frequently spend long hours (even days at times) in the laboratory. This might be due to the fact that they did not understand how a particular step in the manual related to the objectives of the course, or that they cannot easily transfer what they learnt in the theory class into the laboratory, or that they did not come prepared for the exercise. To add to this they sometimes get conflicting opinions from the laboratory assistants (if available) and/or fellow students as to how they could tackle the experiments. This problem is exacerbated in the second semester when students are confronted with the complex characteristics of Semi-Conductors, AC-networks, Amplifiers, Controllers etc. The laboratory instruction manual presents a step-by-step procedure in carrying out each experiment but some aspects are deliberately left up to the student to work out. This being the case it seems that students who are instructed only to follow a standard method often do not understand why they make certain choices. Even though they might be aware that other alternatives exist, they will never be able to discover what determined the one prescribed as the ideal choice. Because of this inability, some students tend to be very insecure about what they are doing in the laboratory. Relative to the students, some of the lab assistants are also ignorant of the viewpoints which determined the final choices in the methods described in the manuals. So, if a student questioned the reason for a certain step, conflicting answers could be received from different assistants, which usually is very confusing to the students.

It thus becomes quite clear from such answers that sometimes even the

assistants have never given consideration to the rationale behind such procedural steps. It is also apparent that the teachers who have used this method as routine procedures for years, did not really understand the need to make explicit these steps in the procedures. In spite of this, their attachment to and confidence in, standard routines appears to remain very strong.

Some of the assistants at times might feel that the students' questions were deliberate attacks on their knowledge of electronics, thus they would try to reply as best they can. Hence, in most cases, instead of being helped in their search for critical attitudes and basic concepts, students are often put off with contradictions and dubious answers.

The scenario of problems that surface in the laboratory we believe, is one that begins from the classroom and the manner or approach through which the instructions are delivered. However, the ultimate success of any CEGEP electronic laboratory that supports a lecture course is dependent upon keeping the laboratory programme up to date. This involves ensuring that the laboratory facilities (equipment and components) are replaced at regular intervals so that students will be working with almost state-of-the-art equipment.

More importantly, the experiments should be continually upgraded so as to avoid repetition and new technologies should be introduced into the laboratory, as much as the budgetary constraints allow. As is often the situation in the laboratory, students will complete a hands-on experiment and find themselves lingering with only a vague idea about the nature of their work. To prevent such problems it is proposed that computer simulations be implemented as a requisite

part of the laboratory exercise, enabling the student to cross-check their physical measurements with those obtained from the computer simulation.

1.3 Statement of Purpose

The purpose of this study was to investigate the relative preference for and complimentarity of, traditional hands-on circuit construction and testing on "breadboards", in comparison with use of the computer electronic circuit simulation programme OrCAD/PSPICE. With this in mind, the following sub-problems were addressesed to determine preferable methods for enhancing the students' comprehension of the underlying concepts:

- How do the strategies of completing a circuit simulation on OrCAD/PSPICE, followed by construction and testing of the same circuit on a "breadboard", compare in terms of results obtained?
- Will coupling of these formats into specific sequences (i.e., simulation followed by hands-on or vice-versa) be differentially more beneficial to the students?
- Does the simulation package contribute by enhancing the students' understanding of theoretical concepts implicit in the laboratory exercises?

In addition to the above purpose we also examined the students' attitudes concerning the desirability and convenience of using the OrCAD/PSPICE simulation package, since this is very important to successful educational innovation.

1.4 Research Hypothesis

Having identified the main issues, several specific hypotheses were formulated as follows:

1. Relative to the traditional hands-on practices, using OrCAD/PSPICE simulations in the laboratory, will:

   A. increase overall student **motivation** to use simulations to complete the necessary requirements of their laboratory exercises;

   B. enhance students' ability to **transfer** theoretical concepts into the laboratory exercises;

2. The use of simulations before the traditional hands-on practices would be deemed **preferable** by the students to the use of simulation after hands-on practices.

The theoretical definitions of the above highlighted terms as used in the analysis are as follows:

Motivation: The active interest of someone (i.e. in a study), stimulated through appealing to associated interests or by using special devices.

This was appraised by systematically observing the students' overall behaviour during the laboratory session, from which that motivation or attitude toward the simulation was inferred; it was also inferred through their responses on items in the evaluation questionnaires.

Transfer: This involves the ability to use information and skills developed in one environment or situation in another, where they are also potentially useful. We are asserting here that simulation will help strengthen the students' ability to

make better use of the information carried over from the theory class, into the laboratory as well as from one laboratory to the next. This was appraised by students responses on tests administered at the beginning of each lab session.

Preferable: This indicates someone's choice or preference for the thing referred to over something else. In this context we use it in terms of something that students believe makes a difference, in that one sequence or process will enable the students to understand more about their experiment than would the other.

The precise operational definitions and measurements used for the above terms in the analysis of the data are stated in detail in chapter 4.

CHAPTER 2

LITERATURE REVIEW

2.1 Current Issues

Before entering into the intricacies of the "how to" of any simulation software package, it is worthwhile to consider certain basic concepts underlying a simulation, as well as the question of "when to" use simulations. As noted earlier, simulations can be an extremely efficient and effective form of instruction for content involving changes. To start with we should first of all take a look at some definitions to better situate the context.

The Encyclopedia of Computer Science and Engineering, defines simulation as:

> The representation of certain features of the behaviour of a physical or abstract system by the behaviour of another system, hence in computing simulation refers to the employment of the computation process to implement a model of some dynamic system or phenomenon (1983).

Bobillier, Kahan, and Probst (1976) defined simulation as:

> The technique of constructing and running a model of a real system in order to study the behaviour of that system, without disrupting the environment at the real system (cited in Koskossidis & Brennan, 1984).

Pace (1987), defines simulations as "a dynamic exercise of a model of a system to determine its performance" (p. 138). Heinich et al. (1985), however, claims that "simulation is an abstraction or simplification of some real-life situation or process". Following the fact that a model or simulation is constructed for an analytical and hopefully well defined purpose, Gorrell, Cuevas and Downing (1988), define computer simulations as:

> Programmes that attempt to model reality authentically for the user, thereby providing an opportunity for the user to acquire skills, attain new concepts and engage in problem solving (p. 283).

In the general sense simulation deals with the study of models of dynamic systems and their performance over time. Simulations can be applied to problems that are large or small, continuous or discrete, simple or complex, statistical or deterministic. They can be performed when mathematical analyses is too difficult or cannot be performed at all and are used in various disciplines in diverse ways. In essence simulation is a multi-disciplinary technology comprised of mathematics, engineering, behavoural and management sciences, as well educational simulation. In dramatized simulations, participants usually play a role that involves them in interactions with other people and/or with elements of the simulated environment. Simulations can vary in the extent to which they fully reflect the realities of the situation they are intended to model, without risking the life of the participants or destroying very expensive equipment.

The term "computer simulation" is used to describe a computer programme which incorporates a mathematical or logical model of a system or process, allowing the user to specify the values of one or more system parameters and, following computation, to examine the resulting values of other system parameters (Smith & Pollard, 1986). The object of the process is to provide an experimental model for the accumulation of data on the target system. This process comprises the following steps:

Figure 1. **Simulation process.**

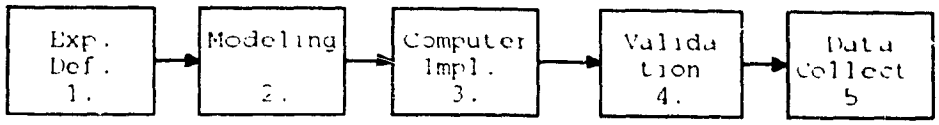

1. - Experiment definition:- covers the identification of the behaviour of some dynamic system;
2. - Modeling:- involves the dynamic change property of system variables be they discrete or continuous;
3. - Computer implementation:- computerization of the discrete events models i.e Monté Carlo experiment on target systems using FORTRAN or Assembly language programming;
4. - Validation.- refers to estimating degree of validity of the simulation result and is a property somewhat comparable to accuracy (relative accuracy);
5. - Data gatl ering:- data collected from discrete events are classified under: timing data, resource utilization and queuing, and historical (Ralston & Reilly, 1983).

According to Smith and Pollard (1986), such simulation programmes can be accessed in batch mode or by keyboard input to a batch stream, but they assume that there are substantial and over-riding educational advantages in adopting a fully interactive mode of access. The simulation should be able to provide graphic display of the systems responses and other information, allow the user to define a range of calculations, and more-so facilitate the redefining of more system parameters for further computation.

Perhaps more important, simulation can also provide "realistic" laboratory data which allow students to gain experience with experimental design and data analysis of the results (Shacham & Cutlip, 1988). Pace (1987), states that "the use of models and simulations for the analysis of complex systems has been increasing ir. recent years" (p. 138). This increase, he

further states, is "the result, in part, of computer hardware and software improvements that allow increased fidelity in systems representation by models and simulations" (p. 138). In this instance models and simulations are used more extensively as conceptual test beds for experiments with the system. On another note, Pace (1987) feels that this increase has also resulted from the growing number of analysts in the scientific and technical communities who have been trained in modelling and simulation techniques. As he puts it, "one should expect these people to try to apply their training" (p. 138).

Engineers make extensive use of mathematical models in the design and development of engineering systems or processes, which are essential to the engineering student. According to Tawney (1979), accuracy and realism demand models which require the use of a computer-based solution, in solving problems:

> 1) where the defining equations are of a complexity which makes the possibility of hand evaluation beyond the resources of the student in time and patience;
>
> 2) when the defining equations can be solved only by computer based numerical methods and where the alternative is to simplify the model with attendant loss of accuracy in simulation; and
>
> 3) where in order to obtain the required response or characteristic, the system equations must be evaluated repetitively or recursively (P. 43).

The main point is, however, that once a mathematical model has been established it can be explored from many points of view, such as: the effect of

parity of the solution; penetration of wave form function into forbidden regions; distortion/noise etc. However, as Pace (1987) notes, experienced analysts have warned against "general purpose grandiose models" that try to incorporate practically everything. He claims that, the "purpose of the model or simulation should determine what factors are to be addressed, and how much detail must be given to their treatment" (p.138). He adds further that "model or simulation development can be pursued much more effectively if the analytic purpose for which their intended use is defined precisely and comprehensively" (p. 138).

2.2 Educational uses of Computer-Simulations

Computer-based-simulation constitutes a highly versatile and flexible medium with which a wide range of educational aims and objectives can be achieved. These objectives can be within the cognitive and affective domains, as well as the psychomotor domain. Computer simulation can provide further enhancement for students who have already mastered basic concepts and principles of a subject, and more-so allow them to practice skills that would otherwise be too expensive, time consuming, or too dangerous to practice in real life (Gorrell,et al., 1988). Research on the effectiveness of computer simulations is beginning to grow, but as yet there are more accounts of the development of simulations and unsupported claims about their advantages than there is documented evidence (Gorrell, et al., 1988). One of the practical issues related to computer simulations in education is whether they can be used productively to extend classroom learning, particularly when time and money prevent real-life practice of important skills. As Gorrell, Cuevas, and Downing (1988), note:

> Since educational psychology courses are concerned with instructing potential teachers in principles of learning, motivation, and classroom management, professors typically find it important to bridge the gap between knowledge and practice (p. 283).

The use of a simulated as opposed to a real situation as the basis of an educational exercise allows the situation to be tailored to meet the needs of the exercise rather than requiring the exercise to be designed within the

constraints imposed by the situation. Unfortunately, many computer simulations are developed to address a general class of problem without clear delineation of the limits on the proper applications of simulation. Consequently, the simulation may fail to include factors needed to enable it to address some problems adequately (Pace, 1987). The argument here is that very rarely does a real-life situation have all such features that the designer of an educational exercise wishes to highlight or bring out, whereas a simulated situation can have all such features built in.

Furthermore, while it is often enough to expect students to be able to exhibit their understanding of psychological theories on tests and in other course activities, true understanding needs to be developed through the application of the principles taught in class to real or realistic systems.

2.3 Advantages of using Computer-Simulations in the Laboratory

A potentially important application of the computer in educational instruction is the simulation of laboratory experiments. Simulation is employed in lieu of a closed form mathematical means of predicting behaviour, hence the purpose of electronic simulation is usually to make experimental measurements or predict the behaviour of circuit parameters.

The term "prediction" is an important concept in this context because it enables one to know in advance the behaviour of certain aspects, on the basis of given facts. Simulation however, entails a form of prediction, because it enables the mapping of the analysts' concept of the real world, and since mapping is an approximation, the results of the simulation are in themselves approximate rather than precise measures. This type of simulator should not replace actual laboratory experiments entirely but appropriate use would allow students to gain valuable experience prior to hands-on operation of delicate and expensive laboratory equipment Simulation is particularly useful in estimating system performance when it is too costly, time consuming, or complex to conduct real-world experiments or when a complete mathematical problem formulation is not possible or practical. Computers are capable of handling a large number of complex calculations in a very short time lapse. PSPICE makes use of this capability in that one can include each and every small capacitance in the appropriate place and make precise calculations for transient response for each minute step change in time. Even the most

sophisticated oscilloscope in the laboratory cannot resolve and capture time intervals of picoseconds, but the PSPICE simulator can give precise results up to any desired resolution (Singh, 1989).

One of the big advantages of computer simulation is the ease with which many alternatives can be investigated for a solution and their consequences evaluated. Hmurcik et al. (1990), present four basic reasons for the use of computer simulation packages such as PSPICE in teaching an electronic engineering course or laboratory:

> 1. With the ever expanding pace of high technology, industry requires solutions to problems quickly and cheaply. Eventually, a design must be built and tested before it goes into production. Hence industrial software for simulation can eliminate or refine poorly conceived design ideas before an actual prototype of the design is built.
>
> 2. The design of integrated circuits (ICs) is another added benefit in using simulations. The idea of component crowding, substrate biasing, and parasitic oscillations leading up to latchup, are just a few problems designers have to contend with. They cannot easily anticipate these problems by the usual hand analysis, in the same manner they can predict the final gain of an amplifier before it is constructed.
>
> 3. Another beneficial aspect in using computer simulators is the enthusiasm it generates in the students upon acknowledging that they can actually build something.
>
> 4. Furthermore, ordinary hand mathematical computation can produce approximations which can be employed in such a way to give physical insight to problems even though they are not numerically precise. These problems can be done again on the computer to achieve precision and used to verify the results produced by hand analysis. This iterative process of reinforcing hand analysis with computer analysis and vice versa is a simple yet powerful method to teach the basics of electronics and engineering.

To substantiate item three, the authors make the assertion that many seasoned engineers can recall the radio they constructed from transistors or vacuum tubes in their student days, and that the fascination of electronics took hold on them before they got to understand the complexity of its mathematics. Only by building and testing a complex IC can these types of problems be studied. A simulation package such as PSPICE helps a great deal to cut down on such problems, since it can analyze circuit problems that include system noise, overall time response, distortions etc.

Another advantage relates to the well-known difficulty of time-tabling conventional laboratory experiments, which are frequently scheduled for some students either before or long after the associated topic has been dealt with in lectures. However, simulations are easily replicated, so that much larger groups can be accommodated at a given time and the computer experiments can be scheduled to follow closely on the related theoretical presentations.

On another note Collis (1988), states that simulations help to familiarize students with a relationship before they begin actual lab or pencil-and-paper manipulations, helping them to become more confident and efficient in their subsequent work. This is further strengthened by the fact that simulations allow students to focus specifically on the scientific relationships rather than having these relationships obscured by instrumentation components and measurement errors.

Simulations also allow for immediate multiple replications of an

experiment with a variety of input variables without the need to redo measurements and/or calculations (Alessi & Trollip, 1985). More so, simulations do allow for a variety of input values outside the range of what could be handled in the real school laboratory. These might include exceptionally large or small values relative to what students could manipulate, due to limitations in time, equipment, or management skills.

It should also be noted that the simulation is a helpful tool in assisting the teacher in carrying out classroom demonstrations.

2.4 Some Disadvantages of using Computer-Simulations

The use of computer simulations can have many ill effects in the instructional process unless special account is taken of such possibilities. Students tend to place undue confidence in the precision of the results, failing to realize that those results are only as accurate as the models used in the simulation.

Students often get carried away and fail to understand that interpretation of the results is more important than a large amount of computer printout. Singh (1989), believes "there will always be a tendency on the part of students to do things mechanically and to avoid the real effort of thinking" (p. 412). He further emphasizes the fact that the desire to complete a computer assignment **per se** can take away the real feeling for the physical problems under investigation and the actual issues at stake. He asserts that students must be taught approximate hand calculations for all problems, so that the computer will only be used for verifying, refining and extending the hand calculations. I do agree with the fact that students should be taught hand calculations, because this enables them to build a background on the basic concepts inherent therein. However, the computer might not be helpful in some instances in refining this technique, since the calculations it performs in the case of simulations are hidden from the student.

It can also be argued that if the students know that the final examination will not have questions on work done on the computer, some of

them might tend to attribute less interest on their assignments (since the tendency is for some students to be more concerned with what will be on an exam, as opposed to what they are actually learning or are being taught). Plagiarism is also too easy and therefore a serious temptation since, in the case of computer based assignments, a file can be easily copied and submitted. This is indeed a serious problem, however, by putting the emphasis on interpretation of results in the individual students' reports, one can hope to alleviate this to some extent.

However, the greatest danger in the use of simulators as stated by Singh (1989), is the development of what he calls "hardware phobia" in students. This implies the lack of experience in or the moving away from building actual circuits, handling them, and performing real experiments, a phenomena that can seriously hamper the students' capabilities in actual electronic/engineering practice, which requires certain craftsman skills.

2.4.1 Accessibility and Availability of Computers

The main reason for the infrequent use of simulations is probably that of logistics. We see this problem mainly with teachers who either have to use such packages in a whole class setting or make provisions for individual students or small groups of students to have their turn on the computer. Within the context of a whole class setting, the teacher can involve the students in the choice of values for variables as well as encourage predictions

of outcomes of the simulation. Usually, however, the student does not get an opportunity in the whole class setting to assume personal responsibility for making appropriate input decisions. As Collis (1988) notes, "there is no opportunity for personal playfulness or hypothesis testing".

The accessibility and availability of computers is another very serious setback to the use of simulations, and this might also pose problems of visualization in certain cases of whole class demonstrations. Unless a classroom has access to projection equipment that interfaces with the computer, visibility can be seriously constrained. This visibility problem is a major barrier to effective whole-class use of microcomputers for any application, but more so for simulation output (Collis, 1988). Time is another logistical problem that limits the widespread use of simulations. This is due to the fact that meaningful manipulation of most simulations requires multiple runs of the simulation in order to strengthen comprehension of relationships. Even if the luxury of multiple machines is available, some students lack the motivation and/or discipline to maintain concentration over the different decision making cycles, especially if the feedback they receive does not provide relevant information as to what might have been the appropriate course of action.

2.4.2 Teacher Preparedness

Another factor limiting the use of simulations is the fact that it would not be effective unless the teacher provides considerable instructional support before, during, and after the students' interaction with the package. As Allessi & Trollip (1985) note, most simulation will have little value if used without this support. Also, if computers have to be used in the classroom, they may have to be set up, a time consuming process sufficient enough to dissuade the teacher from bothering, especially if the package is not judged to be worth the preparation. Similarly, if students have to move from one classroom to another in order to use computers, the ability to incorporate a simulation in the ongoing lesson environment is even more limited. The time and commotion involved in this relocation may not seem warranted if the simulation is relatively simple, taking just a short amount of computer interaction time.

With all these points in mind an effort has been made to evaluate the OrCAD/PSPICE simulation software package in the next chapter, taking into consideration their educational use, in comparison with the traditional "breadboard" circuit construction and testing. A brief introduction of each software is stated as well as the process to interface both softwares for the purposes of this study.

CHAPTER 3

THE OrCAD/PSPICE PACKAGE

3.1 Introduction

This section introduces the two software packages that were combined to constitute the simulation package used in this study. The softwares are OrCAD/SDT III DRAFT version 3.22 developed by OrCAD Systems Corporation, and PSPICE student version developed by the University of California at Berkeley. These software packages were selected because they are available for commercial and educational purposes and are currently used widely in industry. The following sections will give brief details about both packages and how they were combined to work as one simulation programme.

3.1.1 Main Features of OrCAD/SDT III

OrCAD/SDT III is a complete and flexible schematic design package. It provides easy to use menu driven commands which enable the user to create, edit, save, print, and plot electronic schematics. The NETLIST file, which is a compiler, can be used to compile any schematic file created by OrCAD/SDT III into a text file that can be used afterwards as an input to the PSPICE circuit simulator. Some of the main capabilities of the package include:

- creating a new worksheet file;
- saving worksheet to a file;
- exiting DRAFT;
- plotting a file;
- loading worksheet file;
- updating a file;
- printing a file;

All these commands can be selected from a MENU which one can easily access by pressing <ENTER>. DRAFT is an interactive schematic capture programme that uses pop-up command menus and prompts, thus enabling the user to create, edit and save schematic worksheets. These commands can be easily displayed on screen by pressing <ENTER> or by clicking on the mouse. To execute the programme once it is configured for the libraries, graphic board, printer and plotter drivers, all one needs to do is type DRAFT at the DOS prompt and press <ENTER>. When executed the programme generates a plain worksheet which the user can use to draw one or more circuits.

3.1.2 OrCAD/SDT III Libraries

OrCAD/SDT III software package supplies a number of part libraries. These libraries are shipped as library data files. A library source file takes up much more disk space than its corresponding library data file. This is more convenient because data files are ready to use. Part of configuring OrCAD/SDT III involves choosing those libraries to which it will have access. The chosen libraries at configuration time are loaded into RAM whenever the program DRAFT is executed. This eliminates disk searching and provides for quick part retrieval (Agelidis et. al, 1991). By convention, library names end with the file extension .LIB.

3.1.3 Main Features of PSPICE

PSPICE (Simulation Program with Integrated Circuit Emphasis) is a circuit simulator, derived from the SPICE2 circuit simulator developed at the University of California, Berkeley, during the mid-1970s. SPICE is the student version of the PSPICE circuit simulator. SPICE has become an industry standard circuit simulator. The response over time to different inputs, the response to different frequencies, the noise and other operating characteristics of the circuit being simulated are all conveniently calculated for the user. The electrical concepts are general and are useful for all sizes of circuits and a wide range of applications. For instance, the simulator has no concept of large or small circuits; microvolts or megavolts are "just numbers" to PSPICE. As long as PSPICE is able to solve the circuit matrix, it will do so.

This makes PSPICE "technology independent" and generally useful. On the other hand, no assumptions are made about the circuit's behaviour. That is one of the drawbacks of the simulation. The results have to be checked and moreover have to make sense for the specific application. Therefore, like any new tool, experience by teachers and/or students is required to get the most benefit from it. Running simulation using PSPICE requires several basic accomplishments such as:

a) creation of the input file (FILENAME.CIR).

b) execution of the simulator (without errors) PSPICE1.EXE.

c) display of the results (PROBE.DAT) by executing PROBE.EXE file.

Knowledge about how to use a text editor (i.e. Q editor, NORTON editor, etc.) to create an input file (FILENAME.CIR) is necessary. If everything works, SPICE (PSPICE) will read the input file and place the results in an output file (FILENAME.OUT). The data are saved in the PROBE.DAT file automatically.

The same text editor used for creating the input file can also be used to inspect the output file. Lastly, PROBE.EXE can be executed to display the results on-screen. PSPICE always expects the first line of the input file FILENAME.CIR to be a title line. It can be left blank, but circuit description cannot start until the second line of the file. The last line must be an ".END" which completes the description of the entire circuit including any simulation control statement. Another circuit, completely different, can be simulated right after ".END". Between the first and the last line, the circuit descriptive statements may be in any order.

The circuit to be analyzed is described to PSPICE by a set of commands, which define the circuit topology and elements values, and a set of control commands which define the model parameters and the run controls.

With respect to branch voltages and current, PSPICE uniformly uses the associated reference convention indicated in the drawing below:

Figure 2. **A two port electronic component.**

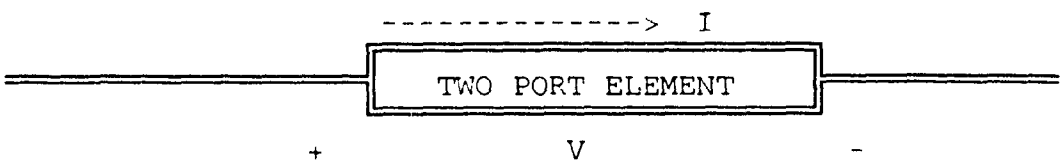

All of the circuit elements, or devices, in the input file are connected (in the sense that their leads are soldered together) by circuit nodes. These connecting nodes are like wires, or lines in a circuit schematic. PSPICE does not require that the use of node names be restricted only to integers. Any text string is recognized, however, the zero (0) is reserved for grounding. Every circuit file must have a ground node, as a reference, and every other node in the input file must have a DC current path to ground. This is one of the requirements of the PSPICE algorithm.

Along with requiring a ground node, PSPICE also requires that all terminals be connected to at least one other terminal. Floating terminals are not allowed and an error message is obtained under such conditions. This is a precaution against dangling wires. Even though it can be done on the lab-bench, it is considered an error by the simulator. (However, a real dangling wire can be simulated by a connected equivalent capacitor in PSPICE.)

3.1.4 OrCAD/SDT III and PSPICE

OrCAD/SDT III can create a netlist that PSPICE (SPICE) will accept. The netlist is a translation of the circuit schematic, with respect to the different nodes and component connections. However, the size of the netlist is limited by the available system memory. As NETLIST runs, it processes each schematic file separately. The limit with 640K bytes of system memory is 8,000 wire segments and about 2,000 to 10,000 device pins per schematic

file. This includes only those objects on a single work sheet.

The process of interfacing the two programs is not very difficult to understand. However, care must be taken when models, schematic files, or sub-circuits are used, since the compiler (NETLIST.EXE) processes the information without knowing if the parts and the schematic files really do represent the circuit that the user wants to simulate. Knowledge of how the two software packages are interfaced is required and also some experience in order to get all the benefits of the proposed setup.

The part value of any device in the design is used to pass modelling information to the netlist. Specifically, the value of a resistor has to be typed in the "part value" command. Labels are used to connect signals together from one worksheet area to another without using wires or buses. Ground as a schematic symbol, or as a "0" must be used as a reference.

3.1.5 System Requirements

PSPICE and OrCAD\SDT will run on any IBM-PC, XT, AT, or PS/2 computers and compartibles, with 640 kilobytes of memory, a hard disk (minimum 40Meg), a floating-point math co-processor, a mouse, and the MS-DOS 3.3 (or later version) operating system. Either monochrome or colour graphics display monitors may be used, and the printers or plotters can be cross checked with those indicated in the software.

3.2 Software Configuration on Hard Disk

Since we are using two software packages that are commercially available, they should both be configured in their respective directories on the hard disk. It is therefore recommended that the software packages be configured in the following manner:

Figure 3. **OrCAD directory setup.**

```
\OrCAD                    (Main Directory)
 |
 ├── \SDT
 |    |
 |    └── \LIBRARY
 |
 └── \DRIVER
```

The main directory \OrCAD will contain mainly the files for other aspects not included above. The subdirectory \OrCAD\SDT includes the main drawing package files, the netlist generator (NETLIST.EXE) as well as a subdirectory \SDT\LIBRARY for all the library files ending with the extension ".LIB". (All of these files are supplied with the OrCAD software). The subdirectory \OrCAD\DRIVER includes mainly the printer files, graphic cards, plotters and other OrCAD supplied drivers.

<u>PSPICE</u>

\SPICE (Main Directory contains all PSPICE files)

All the files supplied with the PSPICE software have to be installed in the \SPICE directory, including the library files.

It should be noted, however, that the two main directories created above, do

not contain any user generated files, but mainly the files supplied with the software packages. All user files created in both OrCAD\SDT and PSPICE are redirected to a working directory we called \LAB, which is set up in the following manner:

Figure 4. **User working directory setup.**

```
\LAB
 |
 ├── \SCHEMATS
 |
 └── \CIRCUITS
```

The main directory \LAB, is the users working directory. It was created so as not to allow the student to play around with the original files in the software directories. However, it can communicate with these files through the use of preprogrammed batch files. This directory contains all the batch files with extension .BAT, a copy of the file PROBE.DEV from PSPICE directory, and also a copy of OrCADSDT.OVL file from OrCAD\SDT directory. It is very important to update the OrCADSDT.OVL file in this directory each time changes are made in \OrCAD. Also a text editor of your choice should be copied in this directory so as to enable the user to edit errors generated by PSPICE through the output file with the extension ".OUT". This is very important, because all editing errors related to PSPICE.EXE compiler are conveniently shown in this file. Therefore, at the debugging stage this file contains extremely useful information.

The sub directory \LAB\SCHEMATS contains all the worksheet files, which are user generated schematic file created in OrCAD\SDT. All files in this subdirectory end with the extension ".SCH". Caution should be taken when working in this subdirectory, for it is the only one which contains all the important information about circuit diagrams to be analyzed.

The subdirectory \LAB\CIRCUIT, contains mainly all the temporary text files that the NETLIST compiler creates prior to executing PSPICE, and also includes files which are generated from executing PSPICE. Files with the following extensions .OUT, .CIR, .MAP, .DAT, are stored in this subdirectory. The files with the extension .DAT are generated by PSPICE, and they contain the necessary information to run PROBE.EXE. Displaying any of this information on screen can be done at any time without having to execute files from OrCAD\SDT or PSPICE (Agelidis et. al., 1991).

3.2.1 Batch Files

Two main batch files were created, one for the drawing and editing of schematic files, and the other for the creation of a NETLIST and the execution of PSPICE and PROBE. The first batch file "OC.BAT", initiates the drawing, editing, saving, and modification of a schematic file. The batch process interacts mainly with the main executable file DRAFT.EXE which is located in the subdirectory \OrCAD\SDT. Upon completion of the drawing the schematic file is then saved and stored in the subdirectory \LAB\SCHEMATS.

The programme (Agelidis et. al., 1991), used to accomplish this is as follows:

```
c:\orcad\sdt\draft  c:\lab\schemat\%1.sch %2
cd\lab
```

Once the schematic file has been drawn, the NETLIST.EXE file is executed in order to compile the circuit in a text form, so that PSPICE.EXE can be run to analyze the circuit. To do this the second batch file "NL.BAT" is used to create a text file with the extension ".CIR". Once this is accomplished the batch file automatically executes PSPICE.EXE to perform the analysis of the circuit under consideration. Upon completion of the analysis, provided no errors are registered, another file PROBE.EXE is automatically executed to display the results on screen, in as much as it would appear on an oscilloscope. The batch file also automatically saves the PROBE.DAT in the subdirectory \LAB\CIRCUIT under the same name used for the input file, with the extension ".DAT". The programme (Agelidis et. al., 1991), used to accomplish this is as follows:

```
c:\orcad\sdt\netlist c:\lab\schemat\%1.sch
c:\lab\circuit\%1.cir spice /s/n/o
c:\spice\pspice1 c:\lab\circuit\%1.cir
c:\spice\probe c:\lab\probe.dat
cd\lab
```

Figure 5. **Operational flow chart of OrCAD/PSPICE package.**

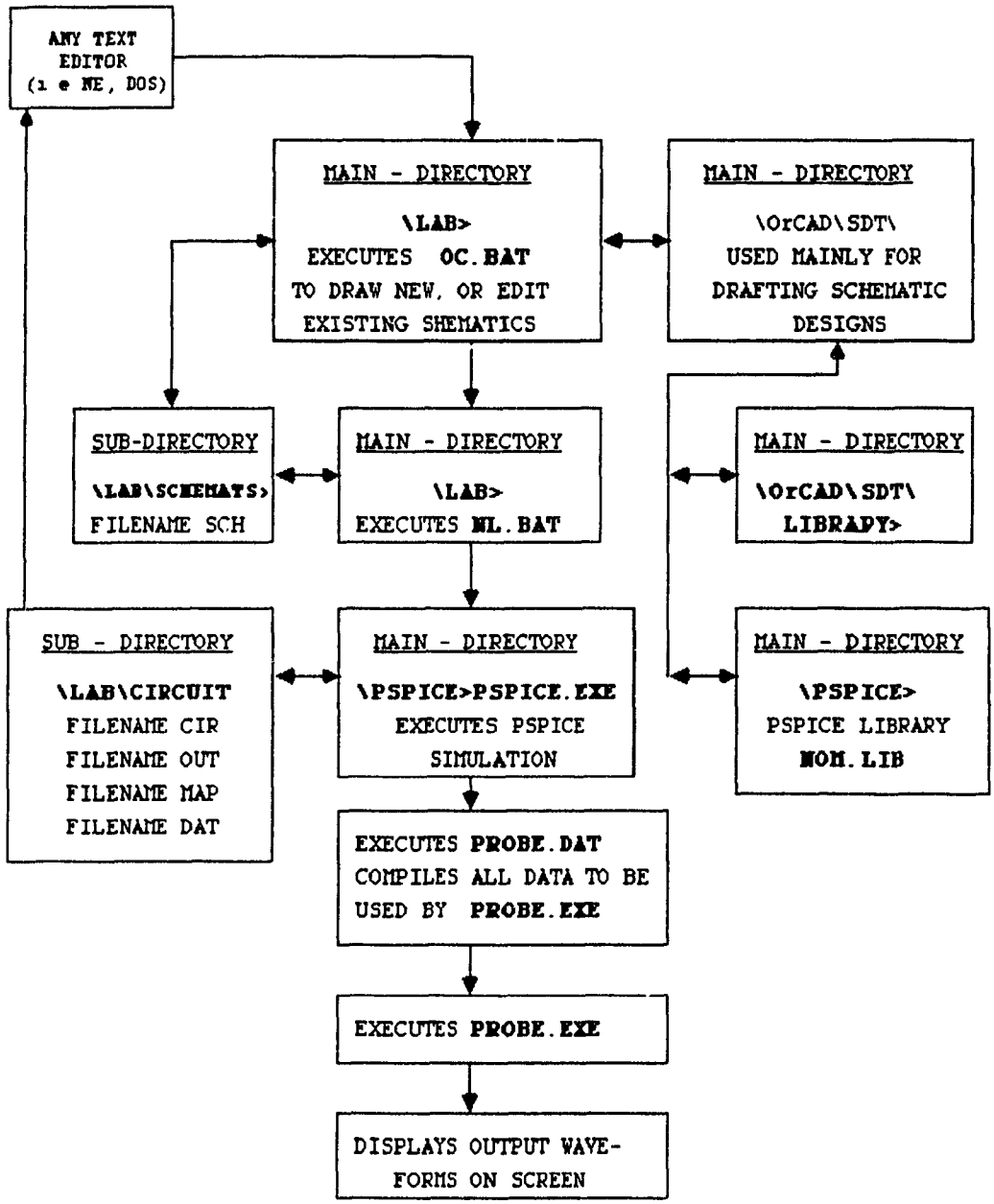

3.3 Creating, Modifying and Executing a Circuit in PSPICE

A schematic file "FILENAME.SCH", which normally contains the draft of the circuit diagram, can be created by executing the batch command "OC.BAT". Upon completing the design the netlist of the circuit can be generated using the batch command "NL.BAT". For example, OC CLIPPER will be used to design a circuit diagram whose filename is "clipper", after which executing NL CLIPPER, will create a netlist for the same circuit.
The compiler "NETLIST.EXE" provided by the OrCAD/SDT III software package translates all the information included in the schematic file FILENAME.SCH to a text file "FILENAME.CIR", which can easily be recognized and interpreted by the PSPICE1.EXE compiler.

If there are no drawing errors involved, the PSPICE1.EXE is executed automatically and the circuit is being simulated according to the PSPICE operation commands such as .TRAN, .AC, .DC, etc. The data are sent to the PROBE.DAT file and in case that there are no convergence problems or other difficulties, the screen menu of the PROBE.EXE file is displayed.
Modifications and corrections are usually required at the design and performance verification stage for a schematic file previously drawn.
These modifications can typically include:

a) erasing of a component
b) addition of a component
c) change in the value of a component i.e. value of a resistor, etc.
d) change of the integration time step, in the initial and the final value of the simulation time.
e) change in connections and nodes.

All the above mentioned steps, are carried out in the OrCAD/SDT III programme. This is an easy procedure and it becomes easier with experience, since OrCAD/SDT III is a menu driven software package. When modifications are completed the new version is stored under an updated FILENAME.SCH file, the batch file NL.BAT is then run to create a new FILENAME.CIR file, and then proceed to run PSPICE1.EXE and PROBE.EXE.

Information concerning the circuit being simulated can be obtained by using the menu of this program (PROBE.EXE). At this stage the output of the parameter indicated, appears plotted on the screen in much the same way it would appear on an oscilloscope.

CHAPTER 4

METHODOLOGY

The methodology employed was a combination of quasi-experimental treatments combined with behavioral observations and evaluation questionnaires. The quasi-experimental design method used in this study was that the Pre-test Posttest comparison group design as described in Campbell & Stanley (1963), which entails the administering of a Pre-test, followed by a treatment and finally a Post-test for each laboratory condition, as shown below:

Figure 6. **Proposed Quasi-Experimental Design.**

Experiment 1.

Group A - O_1 --- X_1 --- X_2 --- O_2 (Pretest---Treatments---Posttest)

Group B - O_1 --- X_2 --- X_1 --- O_2 (Pretest---Treatments---Posttest)

O1 - Pre-lab test 1 O2 - Post-lab evaluation 1

X1 - Spice simulation X2 - Hands-on exercise

Experiment 2.

Group A - O_1 --- X_2 --- X_1 --- O_2 (Pretest---Treatments---Posttest)

Group B - O_1 --- X_1 --- X_2 --- O_2 (Pretest---Treatments---Posttest)

O1 - Pre-lab test 2 O2 - Post-lab evaluation 2

X1 - Spice simulation X2 - Hands-on exercise

However, due to the bureaucratic and logistical constraints we ran into, it was not possible to make a random selection of students to be involved in the study. Instead we used two classes that were made available to us as described in section 4.1, and randomly assigned different treatments to each class. It should be noted that the quasi-experimental process as outlined at the beginning of this chapter, was not implemented as proposed, due to problems of logistics, so we ended up modifying the sequences as shown in Table 1 below. In this instance group A had to do only the simulation, while group B maintained the planned sequence of hands-on followed by simulation, and vice-versa.

Table 1

Quasi-Experimental Process Used

	Group A.	Group B.
Activity	Simulation.	Breadboard <--> Simulation
EXP. 1	Pre-lab Test 1 Observation Post-lab Evaluation **N = 18**	Pre-lab Test 1 Observation Post-lab Evaluation **N = 15**
EXP. 2	Pre-lab Test 2 Observation Post-lab Evaluation **N = 18**	Pre-lab Test 2 Observation Post-lab Evaluation **N = 15**

This aspect of logistical constraints within educational institutions is confirmed by McMillan & Schumacher (1984) as they note that, the six conditions characterizing experimental research "can rarely be achieved completely when conducting educational research". The six characteristics they are referring to are the following:

> Statistical equivalence of subjects in different groups usually achieved by random assignment of subjects; - Comparison of two or more groups or sets of conditions; - Direct manipulation of at least one independent variable; - Measurement of each dependent variable; - Use of inferential statistics; and, a design that provides maximum control of extraneous variables (p. 203).

This to some extent is what we faced at Dawson College. However, this does not in any way diminish the importance of using such a design for the purpose of this study, in so far as some control is maintained over the internal validity of the design.

4.1 Subjects

This study was carried out in the Electrotechnology Department of Dawson College. The majority of students in the programme, come mostly from Public Secondary Schools. Their admission into the programme is based on how well they performed in the sciences, such as Mathematics, Physics, and Chemistry, which are considered as prerequisites. Most of the students (98%) are male, between the ages of 16 to 20. The schools' population is made up of students from different social circles, and from diverse ethnic backgrounds, which brings about a multicultural mix that at times might pose a problem for

the teacher in his/her selection of an appropriate media in carrying out classroom instruction.

After having established the fact that it was in the second year that the basic principles of electronics learned in the first year are being put into practise within the curriculum, the second year class was chosen, for the purpose of conducting the experiments. Given the scenario and the structure of the courses it was not possible to use random samples of students.

The class of 50 students was divided into three sections; however, due to certain constraints in terms of lab allocation to other programmes we were able to use only two of the three class sections. The selected classes were assigned to two groups, A and B, and each group was randomly assigned a particular procedure. In the first experiment group A was selected to perform the simulation followed by hands-on exercise, while group B were subjected to performing the simulation after the hands-on exercise was completed. In the second experiment group A was to begin with the hands-on exercise, and then continue with the simulation, while group B began with the simulation and ended with the hands-on lab. Group A consisted of 18 students, and group B consisted of 15 students, giving a grand total of 33 students.

4.2 Operational Definitions

In this section we deal with the operational definitions of motivation, transfer, and preference, as stated in the hypotheses. It was hypothesized earlier that, "Relative to the traditional hands-on practices, using OrCAD/PSPICE simulations in the laboratory will increase overall student **motivation** to use simulations to complete the necessary requirements of their laboratory exercises".

In this instance inferences are made to increase in overall motivation from two sets of data:

1. Responses on attitudinal questions rated on a Lickert five point scale, indicating how much they liked using the package within the laboratory.
2. Actual observations of the number of students who completed the required exercises and proceeded to try out changing other parameters and observing the outcome. (as stated in section 4.2.4.)

The second hypothesis stated that, "Relative to the traditional hands-on practices, using OrCAD/PSPICE simulations in the laboratory will enhance students' ability to **transfer** theoretical concepts to the laboratory exercises". Enhancing students' ability to transfer, was operationalized as having better or improved scores on the post-test. A test composed of eight items was administered as pretest, and the same items were later repeated in the posttest, as outlined in section 4.2.3. They were basically multiple choice items with only one correct answer out of a possible four options.

Furthermore a third hypothesis stated that, "The use of simulations before the traditional hands-on pratices would be **preferrable** to the students than the use of simulation after hands-on practices". In this instance preferrability is operationalized by responses on two specific items on the questionnaire, as stated in section 4.2.2. Further inferences made on the above definitions are integrated in the sections which follow.

4.2.1 Instruments

Three types of data collection techniques were used for the purpose of gathering pertinent information from the students. First of all there was a **questionnaire** designed to elicit their reactions and attitudes towards the computer simulation package OrCAD/PSPICE. The questionnaire was comprised of 22 items with Lickert five point scales ranging from strongly disagree to strongly agree. Secondly we used a **test** consisting of 20 items which the students were required to complete. The test items were designed to measure their knowledge of basic electronic concepts, and also their ability to transfer or apply these concepts in the laboratory. There were no standardized tests available for the traits we were measuring in this particular context, so we tailored the 20 items to reflect the objectives of the laboratory experiments. Finally we used an **observation** scheme to assess the cause and effects of certain behavioral patterns exhibited during laboratory work.

4.2.2 Questionnaires

In designing the questionnaires for evaluating the OrCAD/PSPICE simulation package, we were interested in getting information, before and after use of the software, as to: how much the students liked the package; how well they interacted with it; how they felt about simulation systems; and what preferences they had in terms of sequence (i.e., using the package before or after the hands-on practice). Most of the laboratory experiments are typical, highly structured, verification-type exercises. Students follow a well structured procedural pattern, which teaches them to perform a sequence of steps and/or decisions, which are set out to determine the relationship of certain components within a given circuit. The students responded to a set of questions in the affective domain, which provides information from their personal learning interaction both with the guide and computer simulation, as well as with the hands-on breadboard format.

They were required to complete all 22 questions as a post-lab activity. Each item was rated on a Lickert five point scale ranging from "Strongly Disagree to Strongly Agree". Some of the items were worded negatively in order to correct for the effects of acquiesence. The questions were of the type: "The simulation package is easily managed by students in the present laboratory setting" to which the students will express their degree of agreement or disagreement by circling the appropriate number on the scale. Circling "1" indicated that the student strongly disagreed with the statement,

and "5" indicated that they strongly agreed. The scales with which the variables of interest were assessed were developed specifically for this study. It should be noted that some of the test items on attitude indicated measures of the students' motivation to use the simulation package and/or complete the required tasks. By "attitude" we mean the receptiveness and acceptability of the package by the students as an important and additional tool to use in conducting the laboratory exercises. Further inferences are made concerning the students' motivation by observing those who completed the required tasks and went on to test other parameters.

The measures targeted were as follows:

A. - Students attitudes towards simulations (9 items);

B. - Their preferred sequence of using simulations in the lab (2 items);

C. - Their attitude towards PSPICE simulation per se (11 items).

The following matrix (Table 2) indicates the relationship between the stated measures and the questions. (See Appendix A. for Questionnaires)

Table 2

Evaluation Questionnaire Relation Matrix

	Targeted Measures		
Question Numbers	A	B	C
1			*
2			*
3	*		
4			*
5			*
6			*
7		*	
8			*
9	*		
10			*
11	*		
12	*		
13			*
14			*
15	*		
16		*	
17	*		
18	*		
19	*		
20			*
21			*
22	*		

4.2.3 Tests

Questions in the cognitive domain required the completion of 20 items made up of multiple choice and true or false types. The students' academic skills and ability to transfer theoretical concepts covered in the classroom into the laboratory was assessed using Pre and Post-test formats designed with respect to information covered for each laboratory exercise. These tests were designed to measure aspects such as:

A. - Entry level knowledge skills (10 items);

B. - Application skills (10 items).

C. - Pretest and Posttest Items. (Repeated Questions)

Of the ten items covering entry level knowledge skills, eight were used as true Pre and Post-tests (C), in that they were the only items that were repeated as test items in both experiment 1 & 2. Results obtained from these items were used to make inferences to their ability to transfer theoretical concepts to the laboratory. The following tables 3 & 4, show the relationship between the above stated measures and the test items for experiments 1 and 2 respectively. The tests were administered at the beginning of each laboratory exercise, and they addressed basically the principles and/or concepts inherent in the laboratory exercise. All questions were written by the author (following the objectives of the course), in consultation with the teacher concerned, and were field tested for content validity and clarity.

Table 3

Test Items Relation Matrix for Exercise #1

	Targeted Measures		
Question Numbers	A	B	Repeated Questions
1	*		
2	*		
3		*	
4	*		*
5		*	*
6		*	
7	*		*
8		*	
9		*	
10	*		
11		*	
12		*	
13		*	
14	*		*
15	*		*
16		*	
17	*		*
18		*	
19	*		*
20	*		*

Note. The repeated question items shown in table 3 above and table 4 below are those that appeared in both the Pretest and Posttest.

Table 4

Test Items Relation Matrix for Exercise #2

	Targeted Measures		
Question Numbers	A	B	Repeated Questions
1	*		*
2	*		*
3	*		*
4	*		*
5	*		*
6		*	
7	*		*
8	*		*
9		*	
10	*		*
11		*	
12	*		
13		*	
14	*		
15		*	
16		*	
17		*	
18		*	
19		*	
20		*	

The responses were scored as a 1 or 0, subjects were given a score of 1 for correct answers, for a maximum possible score of 20. A typical question would be: "The formula for the cutoff frequency is expressed as:

$$Fc = \frac{1}{2\Pi RC}$$

to which the students will answer "True" or "False" or choose a,b,c, or d, as was required of them. (The questionnaires are included in appendix "A").

4.2.4 Observation

Aside from data obtained with the use of questionnaires and tests, additional information was procured as a result of direct observations of students as they worked on the assigned labs, both during the traditional hands-on lab sessions, as well as during the novel computer simulation lab sessions. While the tests and questionnaires had been designed to assess understanding of underlying concepts as well as to ascertain attitudes related to the package itself (opinions as to its educational benefits and whether it should be integrated into the curriculum), the use of observations was embraced in the research design in order to get behavioral data relating to team work/collaboration, interpersonal interactions, and overall motivation in the laboratory. Such data would contribute towards discerning how students actually work/study in labs, as well as if their habitual behavioral patterns would easily translate to the computer-based simulation practice. Essentially, the questions which were addressed as part of these time-sampling observations were·

- How frequently do the same type of interactions occur in traditional as well as simulation labs?
- How frequent were their help inquiries, and for what purposes were they requested?

The types of behaviours which were targeted and coded are as follows:

Table 5

List of Behavioral Items

Symbol	Description
DI	Giving directions
HS	Asking for help/answer from students (s)
HT	Asking for help/answer from teacher
AN	Giving short answer (no elaboration)
EL	Giving explanation or elaboration
SU	Suggesting/Guessing
TR	Trial & Error
CH	Checking
CO	Collaborating
LI	Listening
TA	Talk aloud showing problem solving strategy
OF	Off-task behaviour

The above codes are excerpts of an observational scheme which is currently being used extensively in CEGEP science laboratory observations. The scheme was designed by De Simone et al., (1989), for the use of observing cooperative learning in CEGEP biology labs. The original scheme (with permission) was pilot tested, and then adapted, as shown in table 5, to better meet the needs of the current experimental setting, as well as to conform more closely to the type of information being sought.

4.3 Procedure

The OrCAD/PSPICE package (Student version) was set up on the hard disks of twenty IBM 386-25 MHz computers, equipped with math co-processors and VGA colour monitors at Dawson College. Arrangements were made with the teacher as to the testing procedures for the chosen labs, and the proposed questionnaires (see Appendix A) were pilot tested with three teachers acting as subject matter experts, and five students. Their remarks and comments regarding clarity, ambiguity and difficulty of certain test items were taken into consideration in preparing the final questionnaires. The two classes chosen had their laboratory sessions on two different days, due to the allocation of lab time to other sections and/or departments, with group A scheduled on Thursday, and group B on Wednesday.

The design of the study required that data be gathered on two separate occasions for both groups. On the day of the first experiment, the students in group A were provided with a Guide about the package (see appendix A), as well as a step by step procedure to accomplish the task for the experiment. They were then informed of the purpose of the research study, and the fact that they will have to complete two sets of questionnaires in the course of the study, and that they would be allowed access to all information including results of the study if they so desired.

A sample demonstration of the use of the package was presented before the students were allowed to begin the experiments, this lasted for no more

than 10 minutes and it dealt with circuits with which the students were already familiar.

Consent forms were then administered followed by a pre-lab test (Pre-test on Concepts) covering the basic concepts of electronics that were inherent in the laboratory exercise. We then proceeded to observe the students as they interacted with the software as well as with each other, during the course of the lab period which lasted for two hours. Records of types of problems they faced during the exercise, were noted. Upon completion of the lab exercise a post-lab questionnaire (pre-evaluation) was administered to get an indication of how well the students liked the package. The same procedures were implemented for group B, however, there was a difference in the treatment in that, within the same time period, they were required to do the hands-on aspect for two hours and the remaining hour was set aside for the simulation. They were also administered a consent form after having been informed of the purpose of the study. A short demonstration was provided and then the Pretest was administered, after which they embarked on the hands-on laboratory. They were informed in advance that they would have to move over to the simulation lab after 2 hours, and continue with the simulation. The post-lab questionnaire was then administered only after the completion of the simulation exercise.

After a delay of two weeks, we conducted the second phase of the study, upon which a different lab exercise was carried out and a new pre-lab test was

administered and the same post-lab test used in the first experiment for evaluation the package was administered again.

Since it is customary for students to work in pairs during traditional electronics laboratory session, students were observed in intact pairs, repeatedly for four minute periods, throughout the length of the experiment.

4.3.1 The Electronics Experiments

The settings of the experiments were in two separate laboratories with adequate tables and chairs, comfortable enough for the lecture and experimental activities. The computer lab is separate from the electronic laboratories, hence the activity of performing a simulation followed by breadboard testing, took place in two different rooms, for the students in group B Two laboratory experiments were chosen in consultation with the teacher, for which the treatment (OrCAD/PSPICE simulation) was applied. The first experiment was conducted at the beginning of the process and the second after two weeks. The package was left intact in the labs for the students to continue using in their own free time with no assistance.

The two groups were assigned different sequences of tasks, pertaining to two laboratory exercises. Group A was allowed to do only the simulation aspects for both experiment #1 and #2, for which they were observed and tested, while group B began with the hands-on experiment and then proceeded to the simulation for experiment #1 and vice-versa for experiment #2. The two

laboratory experiments were designed specifically to run with the OrCAD/PSPICE package with particular batch files developed at Concordia University. Experiment #1 was based on the "Differential Configuration" of an Operational Amplifier. Experiment #2 was based on the " Multivibrator Configuration" of an Operational Amplifier.

For the Simulation package the students worked on the IBM 386/25MHz compatible microcomputers fitted with a math co-processor, VGA colour monitor and a mouse. For each of the experiments conducted, the students were tested on their knowledge of the basic electronic concepts implicit in the laboratory exercises covered. The series of questions and problems that were asked required an understanding of the experimental concepts and problem-solving skills that are inherent in electronics. At the end of each lab they were given questionnaires that examined their attitudes concerning the computer-simulation package.

4.3.2 **Equipment**

The computers used for this experiment had the following specifications: 386 25Mhz IBM compatible Computer, equipped with 1Mb or more of memory, a hard disk no less than 40Mb, a math co-processor, a mouse, a printer, and a colour monitor. On the software side OrCAD/SDT and PSPICE were installed in the hard disks of all 20 computer. The students were provided with a guide of the OrCAD/PSPICE package to perform the simulations.

CHAPTER 5

RESULTS

5.1 Electronic Concepts

The data analysis presented in this section represents information pertaining to the pre-lab questions of experiments 1 & 2 respectively.
The performances for both treatment groups A & B on Entry level knowledge skills, the Pretest and Posttest items, and Application and transfer skills are discussed. It should be noted that these tests were not administered as separate tests, but that the "test" designations were used as a scheme by the author to facilitate the analysis of the data. In analyzing the data, three separate analyses of variance (ANOVA) were conducted to determine whether differences existed between the group means of the same students, with regard to the different treatments. In order to assess the effect of the different treatment, the Scheffé F statistics with $\alpha = 0.05$ for a two tailed analysis, was computed for these sections.

5.1.1 Entry Level Knowledge Skills

The means and standard deviations for the laboratory experiments 1 and 2 are presented in Table 6, by treatment groups. Analysis of variance conducted on both test 1 (experiment 1) and test 2 (experiment 2), shows an average of the number of correct responses on 10 questions asked for each student group. The data indicates that there is no significant difference between the two groups for the test administered before experiment 1, with a

Scheffe $F(1,31) = 0.002$, and probability $p = 0.96$.

With regard to experiment 2, the results show no significant difference between the two groups as well, with $F(1,31) = 0.2$, $p = 0.66$. However, we observe a very low average score of 2.9 and 3.3 for groups A & B respectively, with a maximum possible score of 10. This poor performance raises some concern about their understanding of the material covered or of the test itself. Seeing that tests 1 and 2 are different in content, it is not possible to make direct comparisons between the two. Hence, we are going to investigate the cause of such a decrease in performance by analyzing the data further in the succeeding sections.

Table 6

Means & SDs for Entry Level Knowledge Skills

	Laboratory Experiments			
	Experiment 1 Pre-Lab Test #1		Experiment 2 Pre-Lab Test #2	
Treatment	Mean	SD	Mean	SD
Group A (SPICE Sim.) **N = 18**	5.8	1.9	2.9	2.3
Group B (BB<-->Sim.) **N = 15**	5.8	2.3	3.3	2.6
Average	5.8	2.1	3.1	2.5

5.1.2 Application and Transfer Skills

Results obtained for the application and transfer skills as shown in Table 7., do not indicate any significant difference between the two groups for experiment 1, with Scheffe $F(1,31) = 0.066$, and probability $p = 0.79$. However, although the results on experiment 2, appear to show a slight difference in the means of the two groups, this does not translate into a significant difference between the two treatment groups, with $F(1,31) = 0.5$, $p = 0.48$. Again we see here that the average score for test #2 are low, thus bringing to mind the same question raised in the previous section.

Table 7

Means & SDs for Application & Transfer Skills

	Laboratory Experiments			
	Experiment 1 Test #1		Experiment 2 Test #2	
Treatment	Mean	SD	Mean	SD
Group A (Simulation) **N = 18**	5.4	2.1	4.1	2.9
Group B (BB<-->Sim.) **N = 15**	5.2	2.1	3.3	2.9
Average	5.3	2.1	3.7	2.9

In this analysis the questions address the students' ability to apply their skills on issues covered in the classroom. Even though they appear to understand the content given in class they fail to readily make the connections in the laboratory. Hence, if their strategy is to memorize material each time there is a quiz it becomes difficult if not impossible to apply such concepts in the laboratory. Adding to this problem is the fact that it seems more time is spent covering content at a basic level, and thus there is often insufficient time in class, and/or emphasis placed on the application of theory to practical issues. This can be further aggravated if the teacher neglects to provide and/or demonstrate appropriate scenarios to better relay the information.

5.1.3 Pretest Posttest Results on Electronic Concepts

The pretest and post test results analyzed here were made up of eight items covering basic electronic principles, in the pre-lab test administered in experiment 1, and the same items repeated in a different order in the test administered in experiment 2. These items were used in an effort to get an indication of how well the students' performances differ between the pre and post tests. The results from this analysis, using a 2x2 repeated measures design, will enable us to determine some of the causes of the low means recorded for the experiment 2. Table 8. below shows the means and standard deviations for both groups per test. Overall results using the pretest as a covariate, confirm the fact that there is no significant difference between the

groups, with Scheffe $F(1,31) = 0.029$, and probability $p = 0.87$, for the pretest, and $F(1,31) = 0.049$, $p = 0.83$ for the posttest.

Table 8

Pretest & Posttest Means & Standard Deviations

	Laboratory Experiments 1 & 2			
	Pretest		Posttest	
Treatment	Mean	SD	Mean	SD
Group A (Simulation) **N = 18**	2.8	1.6	2.4	1.8
Group B (BB<-->Sim.) **N = 15**	2.7	[illegible]	2.4	1.9
Average	2.75	1.75	2.4	1.85

Here we see that out of eight questions the overall average is very low for both groups with regard to the pretest and posttest but this still does not give us a clear indication of the causes of the low scores in experiment 2. Figure 9 below gives a clear illustration of the mean scores for both pre and posttests. In the following section an item by item analysis of the pre and posttest scores is carried out to see how one can relate these to the low scores if at all possible.

Figure 7

Graph of pretest & posttest results.

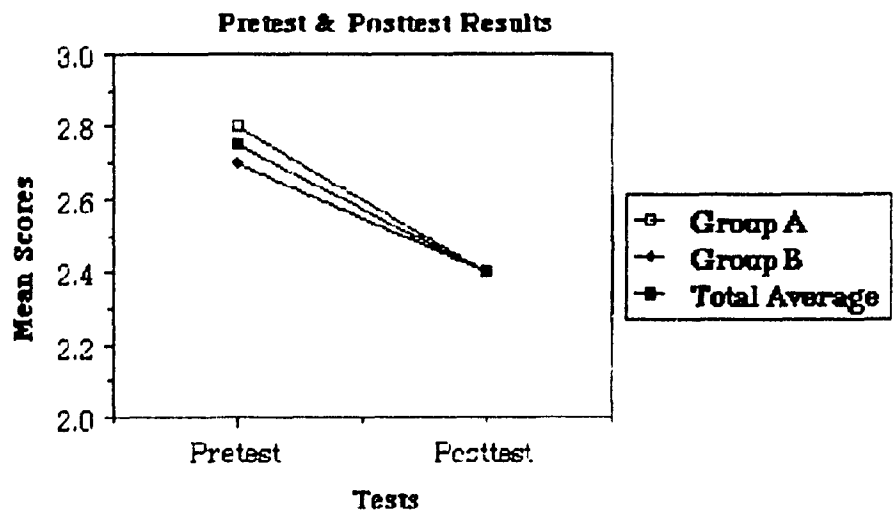

5.1.3.1 **Item by Item Analysis**

In analyzing the data we found that there were no significant changes in the responses for the pre and posttest items. Tables 9. & 10. below indicate the frequencies of responses for each item.

Looking at the pretest and posttest distributions for the all eight items, we find that there is very little change exhibited in terms of the percentage of correct responses. However, it can be seen that for questions 7 and 10 (test 1 & 2 respectively), there was a drop of 12% from test 1 to test 2 in terms of correct responses. On the other hand we see a 16 % increase in correct responses, from pretest item 20 to posttest item 5. Item 7 in the pretest seems to be the most critical since it records a drop of 12%, as shown in item 10

posttest.

Table 9

Pretest Distribution Groups A & B

N = 33	PRETEST % of Respondents		
Test Items (as numbered)	Correct	Wrong	No Answer
14	46%	36%	18%
15	36	42	21
17	21	46	33
19	12	67	21
20	36	42	21
4	61	30	9
5	46	48	6
7	15	73	12

Table 10

Posttest Distribution Groups A & B

N = 33	POSTTEST % of Respondents		
Test Items (as numbered)	Correct	Wrong	No Answer
1	30%	36%	11%
2	30	36	11
3	12	46	42
4	12	55	33
5	52	12	36
7	52	15	33
8	52	15	33
10	3	64	33

On the whole we observe very low performances for items 17, 19 and 7 in the pretest, corresponding to items 3, 4 and 10 respectively in posttest. It is not clear whether these items were ambiguous, difficult, or not clear, since they were sanctioned by the teacher in charge as aspects that have been covered in their theory class. Nevertheless, these shifts among the different items tend to counter-balance, thus giving the indication of no change between the two groups with respect to the pre and posttest.

Furthermore, it is worthwhile noting that there is a considerable change between the percentage of "wrong answers" and those of "no responses" for the pretest and posttest scores. The students seem to have taken their time to answer as many questions as they could possibly handle in the pretest, give or take a number of guesses, with the percentage of no answers ranging from 9 to 33%, and the percentage of wrong answers ranging from 30 to 73%. This was not the case in the posttest, where the percentages ranged from 33 to 42% for no answers and 12 to 64% for wrong answers. Possibly these differences can be attributed to the fact that on the day the second experiment was conducted, the students had written a test, just prior to the labs, as part of their normal curriculum. Thus there is the possibility that the test administered as a pre-lab activity for that day might have been one test too many, especially since the students knew it was not going to count towards their final grades.

Since these eight items were the only common elements between tests

administered for experiments 1 and 2, and their analysis shows no significant differences between the two groups, it appears to some extent that the remaining twelve items of the test administered for experiment 2 were more difficult in context than those of experiment 1. Nevertheless, this leaves open the question of the students' test preparedness versus knowledge and/or understanding of basic concepts, how they study, and what cognitive styles they use in their respective learning process. It is one thing to note that the simulation package was new to them, but this fails to explain the poor performance on items regarding basic electronic concepts.

5.2 The Simulation Package Evaluation

Table 11. below shows the overall results of the simulation package evaluation conducted as a post lab activity for experiments 1 and 2.

Table 11

Simulation Package Evaluation

	N = 33	% of Respondents		
Questions (as numbered)	Disagree	Undecided	Agree	No Answer
1	9%	9%	65%	17%
2	4	14	65	17
3	6	18	59	17
4	6	17	60	17
5	9	17	56	18
6	11	10	62	17
7	8	18	67	17
8	12	26	44	18
9	3	14	65	18
10	2	15	65	18
11	6	7	70	17
12	8	9	67	18
13	61	12	9	18
14	3	24	56	17
15	2	25	56	17
16	24	12	44	20
17	44	26	10	20
18	1	3	76	20
19	7	29	44	20
20	9	17	56	18
21	2	6	74	18
22	5	30	47	18

For the purpose of this analysis the original scale has been altered in the following manner: Disagree represents the combination of "Strongly disagree and Disagree", and Agree represents the combination of "Strongly Agree and Agree" as outlined in the questionnaire.

The results show an overwhelming positive evaluation for the simulation package. It should be noted that for questions 13 and 17, which were the two items worded negatively, the responses show also a positive evaluation. We see that 61% of the students disagreed with the statement on item 13 and 44% of them disagreed with the statement on item 17.

However, 67% felt that it would be better to begin with the simulation and then proceed with the hands-on aspect on breadboards, while 44% felt the simulation should be carried out only after completing with the testing on breadboards. Furthermore, 44% felt that the package is a better learning device as compared to breadboarding. This can be substantiated with the fact that only 10% of the students felt that working only with breadboards was more beneficial than both techniques combined. On the other hand, 44% felt that the simulation process allowed them to obtain more information on the operation of the circuits than they would get on breadboards. Considering the aspect of combining simulations and hands-on exercises in all electronic labs, 76% felt that it would be a very good idea, while 74% felt that they would like to know more about the OrCAD/PSPICE package so that they can use it more in the future. Considering the idea of incorporating the simulation package

within the laboratory, 65% felt that it would be a good idea, and 59% felt that the package helps students learn more about the objectives of the lessons,while 60% found the package to be easy to use within the present laboratory setting. This is further substantiated by 70% of the students who felt that running the simulation and obtaining the desired results was straight forward with very few complications. To better understand what most of this entails, we have broken down the analysis into particular topics of interest in the sections which follow.

5.2.1 Students Attitudes Towards Simulations

Looking at the results obtained from the simulation package evaluation, there was an overwhelming positive response to the use of such a package within the curriculum. Table 12 below shows the overall pre and post evaluation means and standard deviations obtained per item for groups A and B, pertaining to students attitudes towards simulations. The scores are rated out of five, with "five" being strongly agree and "one" strongly disagree.

A statistically significant difference was obtained for each of these items, between the Pre and Post labs evaluations, as indicated with (*). This shows that there was considerable appreciation for the use of the package the second time around, thus indicating that simulations would be of added benefit to the students, or would be very much welcomed if and when they are introduced in the curriculum.

Table 12

Means & SDs on Importance of Simulation

	GROUPS A and B					
	Pre-Evaluation		Post-Evaluation		Significance	
Questions (as numbered)	Mean	SD	Mean	SD	F	*p*
3	3.7	1.0	4.6	1.0	14.3	0.003 *
9	4.0	0.9	4.8	1.0	13.1	0.0006*
11	4.0	1.2	4.8	1.0	8.14	0.006 *
12	3.7	1.1	4.8	1.0	16.9	0.0001*
15	3.8	1.0	4.6	1.1	9.53	0.003 *
17	2.7	1.1	3.6	2.0	5.78	0.02 *
18	4.4	0.7	5.0	0.0	13.8	0.0004*
19	3.7	1.1	4.5	1.3	6.89	0.011 *
22	3.8	0.8	4.5	1.4	6.72	0.012 *

It also suggests an increase in enthusiasm. As the students become more at ease with the system, they tend to explore more, and the package not only becomes a learning tool, but more like a cooperative game. This phenomena is exhibited more as we will see later in section 5.3 where trial and error was one of the main behaviours observed.

5.2.2 The Preferred Sequence of Using Simulation

This section shows the results obtained pertaining to the sequence of implementation of the OrCAD/PSPICE simulation package in the curriculum. Item seven dealt with the use before hands-on, and item 16 addressed the use after hands-on.

Table 13

Means & SDs on Preferred Sequence of Using Simulation

	GROUPS A and B					
Questions (as numbered)	Pre-Evaluation Mean	SD	Post-Evaluation Mean	SD	Significance F	*p*
7	3.9	1.1	4.5	1.3	2.98	0.09
16	3.5	1.4	4.2	1.6	4.04	0.05*

No significant difference was observed between the two groups for either question items. However, we noted a pattern in the responses in both questions from pre to post evaluations, shifting from agree to strongly agree. The overall means show no significant difference between the pre and post evaluations for question item 7, with Scheffe $F(1,31) = 2.98$, and probability $p = 0.09$. However, this is not the case for question item 16 where we observed a significant difference between the pre and post evaluations scores with $F(1,31) = 4.04$, and $p = .049$.

Figure 8

Graph of pre-post evaluation on preferred sequence.

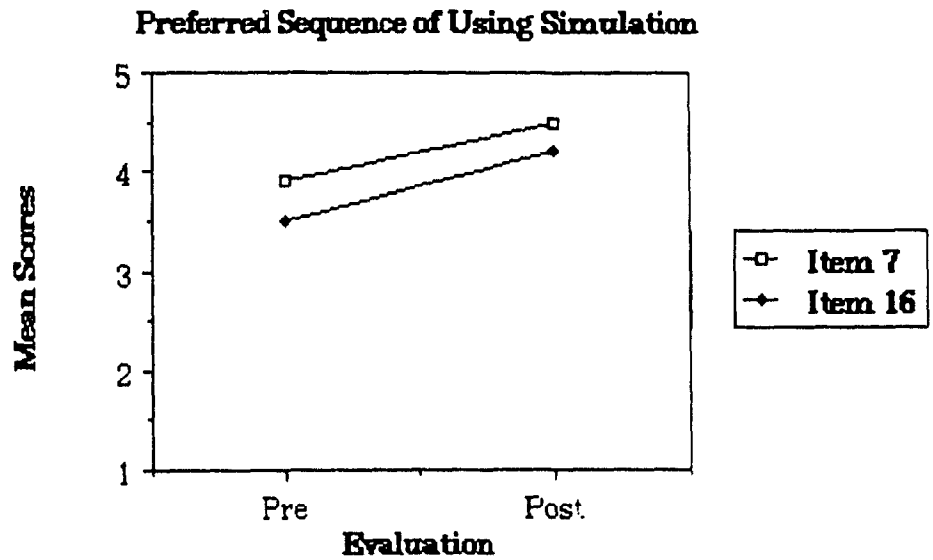

This shows that the pre and post evaluations means are different, thus indicating a considerable change on the part of the students in terms of appreciation, from uncertainty to agreeing that this sequence also might be a good one to use within the laboratory. Figure 8 above shows the overall pre and post evaluation means between groups for both questions, and it is evident the question item 7 has a slight edge over question item 16, however, this does not give us any clear cut indication to conclude that one sequence is preferred more than the other. Upon consultation with the teachers involved, it was ascertained that they preferred to use simulations as a separate exercise for which the students will be graded as part of a laboratory reqiurement, rather than making it a compulsory aspect in the present laboratory schedule.

5.2.3 Students Attitudes towards OrCAD/PSPICE Package

Table 14 below, shows the means and standard deviations obtained with regards to students' attitudes towards the OrCAD/PSPICE package. Rating the responses out of a possible five points, we see that the students positively endorsed the combined use of the package as something they would very much like to use if given the opportunity.

Table 14

Means & SD on Students Attitudes Toward OrCAD/PSPICE

	GROUPS A and B					
	Pre-Evaluation		Post-Evaluation		Significance	
Questions	Mean	SD	Mean	SD	F	*p*
1	3.9	1.0	4.6	1.0	7.66	0.007 *
2	3.9	1.1	4.8	0.9	14.30	0.003 *
4	3.9	1.0	4.7	1.1	9.25	0.003 *
5	4.0	1.1	4.5	1.3	2.91	0.093
6	3.8	1.1	4.5	1.2	5.51	0.022 *
8	3.6	1.2	4.2	1.4	3.41	0.069
10	4.0	0.9	4.8	1.0	9.97	0.003 *
13	2.5	1.3	3.1	2.1	2.18	0.144
14	3.7	1.0	4.8	1.0	19.80	0.0001*
20	3.6	1.2	4.6	1.2	11.60	0.001 *
21	4.6	0.9	5.0	0.0	3.84	0.050 *

Looking at the mean responses for both pre and post evaluations we see that there is a significant difference in all but three of the items.

This indicates that there was a significant shift in the students responses after using the package for the second time. It thus indicates that as the students get more acquainted and/or familiar with the package and its utilities, the more they like it. For the three items (5, 8 & 13) that showed no significant difference between pre/post evaluations, we observe that it would not have been possible for the students to make such profound judgement on item eight since they had only used the package twice. However, their responses seem to indicate that the simulation package is a lot more flexible, and thus may be a better learning device as compared to breadboarding. Item five which relates to the time needed to begin the simulation, shows no difference in response because the students were convinced in both sessions that the simulation was fairly easy to use, especially after the circuit has been completed. This is true to some extent due to the fact that the circuit they had to verify was already drawn and verified by the author. However, there is the possibility we would have had a different result on this question had it been that they had to draw their own circuits, verify them and then proceed with the simulation. The response on item 13 which was worded negatively, shows that the students found the simulation process not to be confusing at all. However, we cannot conclusively say that it enabled them to better understand the objectives of the experiment, having noted the results of their responses on the tests.

5.3 Observations

Observations were made for a total of 76 minutes with Group B during the traditional hands-on lab, and for a total of 30 minutes during the computer-based simulation lab. Group A students who worked mainly with the computer-based simulation, were observed for a total of 64 minutes. The following table presents a summary of the coded types of interactions observed for groups A & B as well as the total number of interactions recorded for each type of behaviour. Students quickly settled in to their assigned tasks, and began working, and most worked in groups of two which endured for most of the term

Table 15

Observed Behaviours for Groups A & B

		Group A	Group B	
Rank	Behaviour	Simulation	BB-Lab	Simulation Lab
1	CO	36	21	11
2	LI	17	3	9
3	DI	14	1	6
4	TR	14	6	11
5	HS	12	11	2
6	TA	11	19	7
7	AN	9	9	3
8	EL	7	7	2
9	CH	7	32	11
10	HT	6	1	5
11	OF	3	2	2
12	SU	2	6	5

In response to the question of whether the types of interactions that occur in traditional hands-on labs carry over to the computer simulation lab, the data of observed interactions, would tend to confirm that this is indeed possible.

Results obtained with group B from the observation in the traditional lab, showed that the predominant behaviours observed was that of checking (CH), with 32 occurrences followed by collaborating (CO) with 21, talking aloud revealing problem solving strategy (TA) with 19, asking for help from other students (HS) 11, giving short answers (AN) 9, giving elaborate explanations (EL) 7, suggesting (SU) and trial and error (TR) had 6 occurrences respectively. The high occurrence of checking is to be expected with respect to the type of work done in a breadboard lab. The high occurrence of collaborative behaviour observed would tend to confirm that students find such cooperative endeavour mutually beneficial. Perhaps this is due to the fact that the assigned activity was new, thus students might see the added advantage of working together to solve the assigned problem.

Looking at the results obtained from the same group in the simulation lab, we notice some changes in behaviour. Comparing the number of interactions in the simulation with those obtained in the hands-on lab, we see the following changes. There were increases in (DI) "giving directions". Since it is easier for one person to work on the computer keyboard at a time, leaving the other as a backseat driver so to speak, it is not surprising that these changes were observed. This led also to increases in (LI) "listening" on

the part of each partner. Another major change is that of (TR) "trial and error", which is also a prominent factor with group A. This behaviour is a very interesting one since it does not play a significant role in the hands-on lab.

However, it should be note that the simulation provides a very flexible environment, which gives room for explorations without the fear of damaging components and/or expensive instruments. Thus in the simulation lab the students felt at ease and were highly motivated to complete the expected measurements and proceed to others. These changes were to be expected since the students were dealing with new technology and might not have felt confident enough to talk aloud while working (which might imply that they knew exactly what they were doing). It was also interesting to note that most of the students were less inclined to ask the teacher for help and/or explanation, as can be seen in the low occurrences of such behaviour in both groups. Differences in checking behaviour were also expected due to the fact that there was not as much checking involved while running the simulation programme as was the case in constructing an actual breadboard circuit.

There was very little off-task behaviour observed per group in both laboratory situations (even in the absence of the teacher), suggesting that students are dedicated to their work and self-motivated. Students appeared to consult each other more than they consulted with the teacher, suggesting that there is a high level of peer trust and respect. When asked for help, students seemed to take the time to elaborate on the specific lab topic.

CHAPTER 6

DISCUSSION

6.1 Interpretation

It is apparent that the hands-on laboratory experience provides the student with a more realistic view of the trial and error process, something which can also be done with the simulation, but only up to a certain limit. The hands-on procedure seems to provide also the mental activity necessary to assimilate the abstract concepts involved in circuit trouble shooting. However, the computer-simulation process provides another dimension in which all the calculations are computed automatically, thus leaving the student with less incentive and/or effort to derive or try to discover the mathematical computations that were involved.

In the sections that follow we will discuss the results of the experiments and draw certain conclusions with respect to the hypotheses stated earlier in chapter 1 and also propose certain recommendations as deemed necessary.

6.1.1 Transfer and Application of Electronics Concepts

The results of this section were on the whole inconclusive. The two treatment groups maintained a statistical homogeneity in their performances in both pre-lab tests. The fact that both groups are similar was confirmed in the pre/post test items which showed no significant difference between the two groups, with $F(1,31) = 0.029$, $p = 0.87$, for the pretest, and $F(1,31) = 0.049$, $p = 0.83$ for the posttest. The tests conducted in this section were designed to shed some light on the research hypotheses #2 which is related to fostering the students understanding of fundamental concepts of circuit analysis through their ability to transfer theoretical concepts into the laboratory. The tests used were designed to measure **transfer** in terms of their knowledge of entry level concepts as well as how well these concept were applied within the laboratory. From the analysis, one can say that the comparative results from the lab format versus the computer-simulation format showed no detectable advantage in the students ability to readily transfer the theoretical concepts into the laboratory.

6.1.2 Students' Attitude Towards Simulations

Their initial anxiety with the computer simulation lab was spontaneously expressed. However, apprehension about any potential abolition of traditional labs was also observed. Students appeared to view the two methods (breadboard testing and computer-simulation) as complementary, but in no way mutually exclusive alternatives towards attaining the same goals. Students followed the assigned directions meticulously in the first computer lab session. However, when given a second opportunity to employ the new technology, they took more liberties, tried their own strategies, as well as experimented beyond the confines of what had been assigned. This is substantiated by the high incidence of trial and error as observed in the simulations lab for both groups. At this point the students manifested what could potentially be termed as a highly valuable educational experience. They proceeded to play a game where one team would assign certain values within the simulation, resulting in a readout of a specific pattern. Other teams would then try to match the pattern by guessing the assigned components and/or parameters. In this way, all were experimenting and exploring the possibilities offered by the simulation package.

The central tendency, however, is that students found the package to be very motivating, as a source of pertinent information on circuit behaviour. They also felt that they would like to know more about the package to be able to use it more in the future, especially for those who would eventually use it

in the work place. However this increase in motivation might only be short lived, since our observations were only based on the two occasions that the experiments were carried out. Further observation might shed more light on this, especially if the package is implemented within the curriculum and is not being used to its full effects by the teacher in charge.

6.1.3 Student Opinion about Proposed Sequences

With the results obtained it was not clear which sequence the students preferred most, in terms of implementing the simulation in the lab. However, one can say that the tendency was leaning towards the idea of beginning with the simulation and then proceeding with the testing on breadboard. The fact that there was no clear cut indication in terms of preference can be substantiated with the fact that the students had been open to the process for a short duration and thus were not yet very conversant with the process, and probably could not really decide whether they would like to do the simulation before or after the breadboard testing.

Nevertheless, the two treatment groups did differ in frequency on the type of behaviours observed during the lab sessions. This might however, be due to the overall observation time that was completed for each group.
It would have been a good idea to maintain the same total time per observation, but given the class sizes and the locations of the different labs, it is impossible to conduct such stringent observations. Particularly in the

computer lab, it was observed that collaboration may be reduced or lost altogether due to the one person per keyboard preference, especially where there are enough computers to go around. Due to the fact that there were enough terminals, the choice of working alone was a definite alternative embraced by some students.

These decreases in talking aloud (TA) and collaboration (CO), bring to light some of the limitations of individualistic learning with computers. This finding is similar to that by Carrier and Sales (1987), as they note that such learning promotes social isolation, denies opportunities for learners to summarize orally and explain what they are learning, is not as powerful a reinforcer as peers, and goes against students' natural preferences for working cooperatively at the computer. Their study indicates that cooperative learning activities at the computer can be more beneficial to achievement than individualistic activities, and one of the main factors accounting for its effectiveness was verbal interaction. This aspect was clearly visible in both labs where a great deal of one-to-one interaction and peer assisting behaviour was observed not only between partners, but with other groups, as well. This was manifested especially in cases where a habitual partner was absent, and students found ways of working with other teams and/or individuals. This behaviour is substantiated by the fact that the quality of the interactions of people working together is an important determinant of the power of partnership in working in any laboratory setting (Carrier & Sales, 1987).

6.1.4 Limitations of the Study

From the results of the pre-laboratory tests it was not clear that there existed a problem with the test items or a general lack of knowledge of such concepts by the students. However, upon further investigation and cross checking with the instructor concerned, it was realised that two items had not been covered and/or treated in class as we had gathered. However, this falls short of explaining the large number of un-answered questions on the part of the majority of students, out of eight questions, as seen in the outcome of the pretest and post-test scores (section 5.1.3). This was indeed a setback because the same instructor had reviewed all the questions, before they were administered, and gave us the green light that they conformed to what he had already covered or was covering. It is felt that this mis-construal might have been detrimental to the measurements of the outcomes of transfer and application of electronic concepts for both groups.

Many of the problems we faced were those of logistics, which meant certain changes had to be instituted for the project to continue. The proposed experimental design outlined in chapter 4, had to be changed due to problems encountered with time allocation, availability of students and more so availability of the computer-simulation laboratory. Out of the three classes that were selected, it was not possible to get more than 9 of the same students at any one time for their usually scheduled lab period. This led us to scrap the third class and concentrate more on the remaining two classes. Of these two

classes it was still not possible to implement both proposed sequences of computer-simulation and breadboard testing due to conflicts with other classes in the computer-simulation laboratory. To add further to the demise in the computer laboratory the simulation package could not be installed in the network, so as to establish better control, (because the network package was still on back order). Nevertheless we installed the two software packages on the hard disk as shown in chapter 3, and then ran into other problems with undetected computer viruses, and student unauthorized deletion of DOS system files etc

Coupled with all of these mishaps it became apparent that we did not have a firm control over the whole situation. As is the case in any experimental research, any such loss of control by the researcher is likely to confound the design of the project. On another note, when we initially designed the study, we realized that it would be impossible to randomly assign subjects to treatments. As a result, the 33 subjects used in the study were in fact members of two separate classes. It was felt that the recruitment of the subjects from the same population with parallel educational background would ensure that the different groups were highly similar, and this was in fact observed in practice

Another factor was the insufficient time allocation for the simulation experiments, especially for group B, who had to split their lab time of 3 hours between computer-simulation and breadboard testings. Furthermore, it was

observed that the attendance was at 100% for experiment 1 and dropped to 80% in experiment 2. As explained earlier in section 5.1.3.1 on the day of the second experiment the students had a regular class test which accounted for their final grade, so it is felt that probably they were in no mood to face the barrage of questionnaires we had for them as part of the exercise. Being students in tertiary level education, they have greater control over the decision to attend or not to attend classes, even though their laboratory periods call for mandatory presence. On the whole we were able to obtain interesting data (i.e., the observations and attitudinal data) with what we had, and the results presented thus far are an indication of the effectiveness.

6.2 Conclusion

For most of the students, this was their first experience using a computer-based simulation package as a learning tool, but, as was expected, the computer simulation programme took less time to perform than the hands-on manipulations. For the most part the students in group B enjoyed setting up the hands-on experiments and the operational techniques necessary to complete the exercise. In the sequence where the computer simulation followed the hands-on experiment, the students showed a great deal of enthusiasm and could not wait to get to the lab. Most of them found the computer-simulation exercise to be a very stimulating learning experience, even though they had no previous experience with the PSPICE package.

6.2.1 Transfer and Application of Electronic Concepts

As stated earlier, the results for this test were inconclusive. The idea of measuring students ability of application and transfer of electronic concepts from the classroom to the laboratory was in itself an inherent task in their curriculum. However, the approach here was to show that the computer simulation made this process of transfer easier and more appealing, thus enabling them to understand better the fundamental concepts in circuit analysis. We recall the hypothesis 1B which stated that "relative to hands-on breadboarding practices, using OrCAD/PSPICE simulations in the labs will strengthen students' ability to transfer theoretical concepts into their

laboratory exercises". Following the analysis we conclude by saying that we cannot accept or reject the null hypothesis, because there is not enough evidence to substantiate that this simulation package as used can actually produce such differences. The inference is that while there exists the possibility that the simulation package might have such an effect in the laboratory, the study was not carried out long enough, with a large enough sample size to actually substantiate any such differences. Nevertheless this aspect of the study calls for further investigation, with the actual implementation and use of the package within the curriculum.

6.2.2 Students Attitude towards Simulations

The students' attitudes towards the simulation package were measured by their responses on the evaluation questionnaires as well as through the observations carried out during the laboratory sessions. From the results obtained it can be seen that the students were quite delighted with the simulation exercises. They were highly motivated in carrying out the exercise, to the point were it evolved into a game kind of atmosphere with the use of exploration and trial and error schemes to determine the behaviour of particular circuits. This allowed the student to interact with the computer to study the effect of changing parameters (i.e. capacitors, resistors etc.), within a circuit. Coupled with other behavioral aspects observed, we see that this lends support to the hypothesis which states that "relative to the hands-on breadboarding

practices, using the OrCAD/PSPICE simulations in the laboratory, will increase overall student motivation to complete the necessary requirements of their laboratory exercises". Hence, following the analysis we reject the null hypothesis in this case and conclude that PSPICE simulation is a more motivating tool to use in the laboratory than the traditional breadboards.

6.2.3 Preference of Proposed Sequence

The question of whether computer-simulations should precede or follow hands-on practices as standard laboratory procedure, ended with an inconclusive analysis. It was proposed that it would be more preferable to the students if simulation precedes hands-on practices. The second hypothesis which stated that "the use of simulations before hands-on testing on breadboards would be preferable to the students over the reverse order", was not supported nor rejected. It is a logical hypothesis because after completing arduous calculations on the different parameters of a circuit it would be wise for the student to test out some of the components with the use of a simulation before actually constructing the circuit on breadboards. This would give them an approximate indication of how the circuit will behave before they proceed with its construction. However, the analysis carried out on the obtained data covering these aspect does not give any conclusive indication one way or the other as to their preference. So far the students seemed to accept the idea that they can work with it which ever way it is presented within the curriculum.

Following the results obtained from the data analysis, we cannot accept or reject this hypothesis. Hence we conclude that given the size of the sample and the time factor, there is not sufficient evidence to substantiate that either sequencing method would be preferable to the students. This leaves room for further investigation, with respect to whether preferences in the sequence would actually be beneficial to the students, in enhancing their understanding of the electronic concepts.

6.3 Recommendations

As the sophistication and availability of computer display devices increase, computers are being used more and more for educational purposes. Today, computer simulations are well suited to play a complementary role in the educational process. While there is an apparent need for the use of computers in higher educational institutions, there exists however, a need for more quality software to support these activities, and a corresponding need for resource allocation.

6.3.1 CEGEP Electrotechnology Faculty

Simulation is a technique which has been used extensively to provide answers to a range of problems for which the solution cannot easily be obtained by algorithmic or experimental methods (Koskossidis & Brennan, 1987). Modelling can save much time and money in the prediction of the performance of complex systems. The simulation approach allows the static and dynamic behaviour of a system to be represented in such a way that various policies can be tried out under reasonably realistic conditions without the major simplifying assumptions necessary for mathematical formulations.

However, the challenge that the OrCAD/PSPICE simulation offers to the CEGEP electrotechnology teachers, is to provide better opportunities for legitimate inquiry experiences rather than merely asking students to reproduce experimental procedures whose outcome are already established. As with all

other simulation packages, it will be very difficult for a teacher to maintain the students interest unless they apply such packages within the context of a class lesson or study unit. If the teacher does integrate exploratory and systematic use of these resources into the theoretical lessons, the students are likely to do more than just follow established procedural instructions and probably gain a lot of interest by using simulation over an extended time. This is substantiated by Collis (1988) as she states that "the skill with which the teacher leads students to extend and consolidate their understanding through the use of simulations is probably the critical variable in whether the computer simulations have any impact on learning" (p. 163). This can be achieved by training the teachers on how to use such packages effectively within the classroom, underlining its educational qualities to reinforce notions and theoretical concepts.

The development and use of computer simulations in association with design processes in the electronic and engineering industry is wide-spread and increasing, and it is essential that new graduates be familiar with the principles and techniques involved in such procedures. Rather than running actual laboratory experiments to determine behavioral characteristics of electronic components, the event can be easily simulated using a variety of available software. This role however, can be clearly defined and made complementary to other elements in the educational process, in extending the range of laboratory experience, and in supporting lecture and tutorial activities.

6.3.2 Electrotechnology Students

To develop skills in the processes of electronics, students need repeated opportunities to speculate and make decisions to refine their speculations based on observation, practice and inquiry. Computer-based simulations provide an excellent medium for this sort of activity, where student will be less frustrated by limitations of time, their own motor skills or their computational abilities. In particular simulations can promote the practice and improvement of inquiry skills within a computer augmented context that should better prepare all students for future aspirations in life and career goals.

6.3.3 Further Research

This study, it seems, has raised more questions than it managed to answer. Further research efforts are needed to clarify essential aspects of teaching and learning related to the use of computer-based simulations packages such as PSPICE within the CEGEP electrotechnology curriculum. Specifically more research will be needed to shed light on the following aspects of using the computer-based simulation package OrCAD/PSPICE to update and enhance CEGEP electronic laboratory exercises:

1. Investigate the effectiveness of computer-simulations (i.e PSPICE) in enhancing laboratory exercises, to determine whether computer-simulation actually strengthens the students ability to transfer theoretical concepts into the laboratory environment, more so than does the traditional breadboard practices.

2. Investigate the effects of the proposed sequencing (simulation preceding or succeeding breadboard testing) to determine whether the sequencing process actually makes a difference in enhancing the students' understanding of basic electronic concepts inherent in the laboratory exercises.

3. Investigate the needs of collaborative and/or team interactions between students, not only to facilitate learning, but also to prepare for the collaborative and/or team environment which is on the rise in industry.

However, a more central role for simulations can be justified, and may well assume more importance in the future as educational institutions respond to the needs, and pay more attention to the design elements in electronic and engineering education.

BIBLIOGRAPHY

Ackoff, R. L., Gupta, S. K., & Minas, S. J. (1962). **Scientific Method: Optimizing Applied Research Decisions**. New York: John Wiley & Sons Inc.

Agelidis, V. G., Joos, G., & Boyd, G. M. (1991). **Electronic Circuit Simulation Using OrCAD/SDT III and PSPICE**. Montreal: AEILS Project, Concordia University.

Alessi, S. M. (1988). Fidelity in the design of instructional simulations. **Journal of Computer-based Instruction**, 15 (2), 40-47.

Alessi, S. M., & Trollip, S. P. (1985). **Computer Based Instruction: Methods and Development**. Cited in Collis, Betty.

Bender, D. A. (1989). Combining a computer simulation with a laboratory class:- The best of both worlds? **Computers and Education**, 13 (3), 235-243.

Blandford, A. E., & Smith, P. R. (1986). The evolution of computer based learning software design: Computer assisted teaching unit experience. **Computers and Education**, 10 (2), 251-257.

Bobillier, P. A., Kahan, B. C., & Probst, A.R. (1976). **Simulation with GPSS and GPSSV**, cited in Koskossidis & Brennan.

Borns, R. J. (1989, Jan-Feb). Developing an up-to-date industrial LAN course and laboratory. **Engineering Education**, 40-43.

Bourque, D. R., & Carlson G. R. (1987). Hands-on versus computer simulation methods in chemistry. **Journal of Chemical Education**, 64 (3), 232-234.

Boylestad, R., & Nashelsky, L. (1978). **Electronic Devices and Circuit Theory**. New Jersy: Englewood Cliffs, Prentice-Hall Inc.

Boyd, G. M., Douglas, L., & Lebel, C. (1984). Learner support options in computer-assisted learning. **Computers and Education**, 327-332.

Boyd, G M., Mulema, D E., Zielinska, I. E., & Joos, G. (1990). **A Survey of the Opportunities and Needs Relating to Collegial Electrotechnology Diploma Programmes**. Montreal: AEILS Project, Concordia University.

Boyd, G. M., Mulema, D. E., Zielinska, I. E., & Joos, G. (1991). **Experimental Implementation of OrCAD-SPICE Simulations into CEGEP Electrotechnology Laboratories: Part 1**. Montreal: AEILS Project, Concordia University.

Byers, T. J. (1990, Nov). SPICE: Can a PC-based circuit-simulation programme take the place of breadboards? **Radio Electronics**, 61 (11), 63-68.

Campbell, D. T., & Stanley, J. C. (1963). **Experimental and Quasi-Experimental Designs for Research**. Boston: Houghton Mifflin Company.

Canelos, J., & Carney, B. W. (1986, Feb.). How computer-based instruction affects learning. **Engineering Education**, 298-301.

Carrier, C. A., & Sales, G. C. (1987). Pairs versus individual work on the acquisition of concepts in a computer-based instructional lesson. **Journal of Computer-Based Instruction**, 14 (1), 11-17.

Chan, D. Y., & Bedworth, D. D. (1990, Jan-Feb.). Demonstration before experimentation: A laboratory philosophy. **Engineering Education**, 37-39.

Collis, B. (1988). **Computers, Curriculum and Whole-Class Instruction Issues and Ideas**. Belmont California: Wadsworth Publishing Co.

Crookall, D., Greenblat, C. S., Coote, A., Klabbers, J. H. G., & Watson, D. R. (1987). Simulation - Gaming in the Late 1980. **Proceedings of the International Simulation and Gaming Association's 17th International Conference**, Université de Toulon et du Var, France.

Dalton, D. W., Hannafin, M. J., & Hooper, S. (1989). Effects of individual and cooperative computer-assisted instruction on student performance and attitudes. **Educational Technology Research & Development**, 37 (2), 15-24.

Delaney, W., & Vaccari, E. (1989). **Dynamic Models and Discrete Event Simulation**. New York: Marcel Dekker Inc.

De Simone, C., Poulsen, C., Farrell, M. Kouros, C., Santos, C., & Satff. (1989) **An Observation System for Cooperative Learning in College Biology Labs**. Unpublished instrument, Concordia University, Centre for the Study of Classroom Processes, Montreal, Canada.

Ellington, H., Addinall, E., Percival, F., (1981). **Games and Simulations in Science Education**. London: Kogan Page Ltd.

Gagné, M. R., Briggs J. L., & Wager, W. W., (1988). **Principles of Instructional Design**. 3rd Edition, New York: Holt, Rinehart and Winston Inc.

Gayakwad, R A., (1988). **Op-Amps and Linear Integrated Circuits**. New Jersey: Prentice Hall.

Hanrahan, H. E., & Caetano, S. S. (1989). A knowledge-based aid for DC circuit analysis. **IEEE Transactions on Education**, 32 (4), 448-453.

Heinich, R., Molenda, M., & Russel, J., (1985). **Instructional Media and the New Technologies**. New York: John Wiley.

Hmurcik, L. V., Hettinger, M., Gottschalck, K. S., & Fitchen, F. C. (1990). PSPICE applications to an undergraduate electronics program. **IEEE Transactions on Education**, 33 (2), 183-189.

Johnson, S. R., & Johnson R. B., (1972). **Developing Individualized Instructional Material**. Palo Alto California: Westinghouse Learning Press, 5th ed.

Karman, D. (1990, June). Microcomputers in the undergraduate laboratory. **Proceedings of the 7th Canadian Conference on Engineering Education**, University of Toronto, Toronto: Ontario.

Keown, J., (1991). **PSPICE and Circuit Analysis**. New York: Macmillan Publishing Company.

Keppel, G., & Saufley, W. H. Jr., (1980). **Introduction to Design and Analysis: A student Handbook**. New York: W.H. Freeman and Company .

Kolb, D. A. (1984). **Experiential Learning: Experience as the Source of Learning and Development**. New Jersey: Prentice-Hall Inc.

Koskossidis, D. A., & Brennan, C. J. (1984). A review of simulation techniques and modelling. **Proceedings of the Summer Computer Simulation Conference**, Calgary, Canada.

Laforest, R., & Capparelli, C. (1984). Computer generated modelling documentation. **Proceedings of the Summer Computer Simulation Conference**, Calgary, Canada.

Leung, Y J. (1989). The use of computer-aided engineering workstations in digital circuit design laboratory. **IEEE Transactions on Education,** 32 (3), 375-377.

McMillan, J. H., & Schumacher, S., (1984). **Research in Education: A Conceptual Introduction**. Toronto: Little, Brown & Company (Canada) Ltd.

Minium, E. D., & Clarke, R. B., (1982). **Elements of Statistical Reasoning**. New York: John Wiley & Sons.

Mitchell, P. D (1973, Dec). Can computer simulation improve the effectiveness of college teaching? **Educational Technology Journal**, 14-19.

Pace, D. K. (1987). Model and simulation design and development procedures to enhance validation and credibility. **Proceedings of the Summer Computer Simulation Conference**, Montreal, Canada.

Prigozy, S. (1989, Feb). Novel applications of PSPICE in engineering education. **IEEE Transactions on Education**, 32 (1), 35-38.

Ralston, A., & Reilly, E. D (1983). **Encyclopedia of Computer Science and Engineering** 2nd edition, Van Nostrand Reinhold Company Inc.

Rao, V., & Hoelzeman, R. (1986). A PSPICE interactive graphics preprocessor. **IEEE Transactions on Education**, E-29 (3), 150-153

Reigeluth, C. M., & Schwartz, E. (1989). An instructional theory for the design of computer-based simulations. **Journal of Computer-based Instruction**, 16 (1), 1-10.

Rosati, P., Dean, R. K., & Rodman, S. M. (1988). A study of the relationship between students' learning styles and instructors' lecture styles. **IEEE Transactions on Education**, 31 (3), 208-212.

Shacham, M., & Cutlip, M B (1988) Authoring systems for laboratory experiment simulators. **Computers and Education**, 12 (2), 277-282.

Shoemaker, W. L. (1988, Nov.). Integrating microcomputers with design courses. **Engineering Education**, 126-130.

Singh, M. (1989, Aug). Role of circuit and logic simulators in EE curriculum. **IEEE Transactions on Education**, 32 (3), 411-414.

Smith, P. R., & Pollard, D. (1986). The role of computer simulations in engineering education. **Computers and Education**, 10 (3), 335-340.

Smith, K. A., Johnson, D W., & Johnson, R. T. (1981, Dec.). Structuring learning goals to meet the goals of engineering education. **Engineering Education**, 221-226.

Standridge, C. R., & Pritsker, A. A. B. (1984). TESS: A simulation system. **Proceedings of the Summer Computer Simulation Conference**, Calgary, Canada.

Steinberg, E. R., & Baskin, A. B. (1987, Dec.). Effects of a laboratory design course on strategies for troubleshooting logic circuits. **Engineering Education**, 191-193.

Storad, C. J. (1985, Sept-Oct). The role of simulations in the mathematics classroom. **Media & Methods**, 17-19.

Tawney, D. A. (1979). **Learning Through Computers: An Introduction to Computer Assisted Learning in Engineering, Mathematics and the Sciences at Tertiary Level**. London: Macmillan Press Ltd.

Toval, A., & Flores, M. (1987). Computer systems in education: Description of an experience. **Computers and Education**, 11 (4), 293-303.

Towne, D. M., Munro, A., Pizzini, Q. A., Surmon, D. S., Coller, L. D., & Wogulis, J. L. (1990). Model-building tools for simulation-based training. **Interactive Learning Environments**, 1, 33-50.

Tuckman, B. W. (1972). **Conducting Educational Research**. New York: Harcourt Brace Javanovich Inc.

Vander Vorst, A. (1985). Integrated team projects as part of the undergraduate curriculum. **IEEE Transactions on Education**, E-28 (3), 138-142.

APPENDIX A.

Questionnaires and Observation Scheme

PRE-TEST QUESTIONNAIRE LAB. 1
Covering Basic Concepts of Operational Amplifiers

SCHOOL: Dawson College, Electrotechnology Department COURSE: 243-480

STUDENT ID #:_____ TIME: (5 minutes)

Note: THIS QUESTIONNAIRE IS NOT IN ANY WAY RELATED TO THE GRADING OF YOUR WORK FOR THIS COURSE.

Answer "**True**" (T), "**False**" (F) OR "**Uncertain**" (U) to the following questions. **(Circle ONE ONLY)**

1.	The controlled gain is determined by the ratio of the feedback resistor to the input resistor at the inverting input	T	F	U
2	A non-inverting amplifier does not invert the signal.	T	F	U
3	Input-offset voltages can cause deviations from the ideal output voltage.	T	F	U
4	In calculating the bandwidth of an op-amp,we use the formula: $BW = \frac{\text{Unity-gain Frequency}}{\text{Gain (Designed Closed-loop gain)}}$	T	F	U
5	With a gain of 60 and a bandwidth of 100 kHz, the unity-gain frequency of a particular op-amp is 6 kHz.	T	F	U
6	The formula for calculating slew rate is $SR = \Delta V/\Delta t$.	T	F	U
7	Self-oscillations of an op-amp can be reduced or stopped by offset nulling	T	F	U
8	A positive voltage on the non-inverting input will cause the output to swing negative	T	F	U
9	The higher the common-mode rejection ratio, the better the quality of an op-amp	T	F	U
10	Using a dual (±) power supply, the output of an op-amp can swing positive and negative	T	F	U

For the following multiple choice questions, circle the right answer (a,b,c or d).

11. What is the controlled gain of an op-amp when Rin = 2.2kΩ and Rf = 68 kΩ?

    a. 100
    b. 30.91
    c. 149 1
    d 35

12. What is the gain bandwidth product of an op-amp circuit with a gain of 45 and a bandwidth of 50 kHz?

    a 1.1 kHz
    b 200 kHz
    c 2.25 MHz
    d. 2.00 MHz

13 What is the maximum frequency of an op-amp circuit with a gain of 25 and a unity-gain frequency of 1MHz?

    a. 25 MHz
    b 25 kHz
    c. 400 kHz
    d. none of the above

14 An op-amp operating in an open-loop mode has the following characteristics

    a. very high gain
    b. narrow bandwidth
    c. a and b
    d none of the above

15 An op-amp operating in a closed-loop mode has the following characteristics

    a. wider bandwidth
    b. controlled gain
    c internal compensation
    d b and c

16 The op-amp consists basically of a:

    a. differential amplifier
    b high gain voltage amplifier
    c low impedance output amplifier
    d all of the above

17 To eliminate self-oscillation an op-amp may be:

a regulated
b. externally activated
c a and b
d internally or externally frequency-compensated

18 Op-amps with high slew-rates have

a wider bandwidth
b very narrow bandwidth
c two inputs
d none of the above

19 The greater the feedback in closed-loop mode, the

a. smaller the gain
b wider the bandwidth
c. a and b
d none of the above

20 In the open-loop mode, gain falls off rapidly with increase in frequency, resulting in

a controlled gain
b internal compensation
c feedback
d. very narrow bandwidth

POST-LAB QUESTIONNAIRE
Simulation Package Evaluation

SCHOOL: Dawson College, Electrotechnology Department COURSE 243-480

STUDENT ID # _____ TIME (5 minutes)

Note: THIS QUESTIONNAIRE IS NOT IN ANY WAY RELATED TO THE GRADING OF YOUR WORK FOR THIS COURSE.

The following questions are rated on a five point scale ranging from "strongly disagree to strongly agree"

(1 = Strongly Disagree; 2 = Disagree; 3 = Undecided; 4 = Agree; 5 = Strongly Agree)

		Strongly Disagree				Strongly Agree
		(Circle ONE ONLY)				
1.	The directives of the guide are easy to follow	1	2	3	4	5
2	The simulation package is good enough to be incorporated within the laboratory	1	2	3	4	5
3	The simulation helps students learn the lessons objectives.	1	2	3	4	5
4	The simulation package is easily managed by students in the present laboratory setting.	1	2	3	4	5
5	It takes very little time to get started on the simulation	1	2	3	4	5
6	The objectives/instructions of the package were clear enough to understand	1	2	3	4	5
7.	It is better to begin with the simulation and then proceed with testing on breadboard	1	2	3	4	5
8	The PSPICE package is a better learning device compared to breadboarding	1	2	3	4	5
9	One does not have to spend much time on the simulation before getting desired results	1	2	3	4	5

(1 = Strongly Disagree; 2 = Disagree; 3 = Undecided; 4 = Agree; 5 = Strongly Agree)

		Strongly Disagree				Strongly Agree
		(Circle ONE ONLY)				
10	The execution of a simulation sequence is a natural extension of circuit drawing in OrCAD.	1	2	3	4	5
11.	Running the simulation and obtaining the desired results was straight forward.	1	2	3	4	5
12	The waveforms obtained by simulation reveal a great deal about the operation of the circuit	1	2	3	4	5
13	The simulation process was very confusing and made it hard for me to understand the objectives of the experiment.	1	2	3	4	5
14	This experience has prepared me for further uses of the PSPICE simulation in the lab	1	2	3	4	5
15	The simulation has allowed me to justify some of the design choices.	1	2	3	4	5
16	The PSPICE simulation should be carried out after completing testing on breadboards.	1	2	3	4	5
17.	Working <u>only</u> with breadboards, helps me better to learn what I need to learn	1	2	3	4	5
18	It would be a good idea to combine simulations and hands-on aspects in all electronic labs	1	2	3	4	5
19	Simulation has allowed me to obtain more information on the circuit operation than breadboarding	1	2	3	4	5
20	The format of presentation of results (waveforms) is very clear and appealing.	1	2	3	4	5

(1 = Strongly Disagree; 2 = Disagree; 3 = Undecided; 4 = Agree; 5 = Strongly Agree)

		Strongly Disagree				Strongly Agree
		(Circle ONE ONLY)				
21	I would like to know more about the PSPICE package so that I can use it more in future	1	2	3	4	5
22.	The simulation provided the same type of results as obtainable using instruments such as (Multimeter, oscilloscope, etc)	1	2	3	4	5

POST-TEST QUESTIONNAIRE LAB. 2
Covering Basic Concepts of Operational Amplifiers

SCHOOL: Dawson College, Electrotechnology Department COURSE: 243-480

STUDENT ID #._____ TIME: (5 minutes)

Note: THIS QUESTIONNAIRE IS NOT IN ANY WAY RELATED TO THE GRADING OF YOUR WORK FOR THIS COURSE.

For the following multiple choice questions, circle the right answer (a,b,c or d).

1. An op-amp operating in an open-loop mode has the following characteristics:

   a. very high gain
   b narrow bandwidth
   c a and b
   d. none of the above

2. An op-amp operating in a closed-loop mode has the following characteristics:

   a wider bandwidth
   b controlled gain
   c internal compensation
   d b and c

3 To eliminate self-oscillation an op-amp may be:

   a regulated
   b externally activated
   c. a and b
   d. internally or externally frequency-compensated

4 The greater the feedback in closed-loop mode, the

   a. smaller the gain
   b. wider the bandwidth
   c. a and b
   d. none of the above

5 In the open-loop mode, gain falls off rapidly with increase in frequency, resulting in:

   a. controlled gain
   b internal compensation
   c feedback
   d very narrow bandwidth

6 The cut-off frequency of a low-pass filter circuit with R = 10k and C = 0.1uf is

a. 200 Hz
b. 657 Hz
c. 159 Hz
d. none of the above

Answer "**True**" (T), "**False**" (F) OR "**Uncertain**" (U) to the following questions

(Circle ONE ONLY)

7 In calculating the bandwidth of an op-amp,we use the formula:

$$BW = \frac{\text{Unity-gain Frequency}}{\text{Gain (Designed Closed-loop gain)}}$$ T F U

8 With a gain of 60 and a bandwidth of 100 kHz, the unity-gain frequency of a particular op-amp is 6 kHz. T F U

9. The formula for the cutoff frequency is $Fc = 1/2\Pi RC$ T F U

10. Self-oscillations of an op-amp can be reduced or stopped by offset nulling. T F U

11 The cutoff frequency occurs at the 70.7% of the output voltage T F U

12 The Q factor of a filter determines how selective the circuit is to the resonant frequency, Fr. (where Q = Fr/BW) T F U

13 The Bandwidth of a filter is the upper (F_H) and the lower(F_L) frequencies where 70.7% of the maximum input voltage occurs T F U

14. A voltage decrease from 8V to 5.7V is the same as a -3dB loss T F U

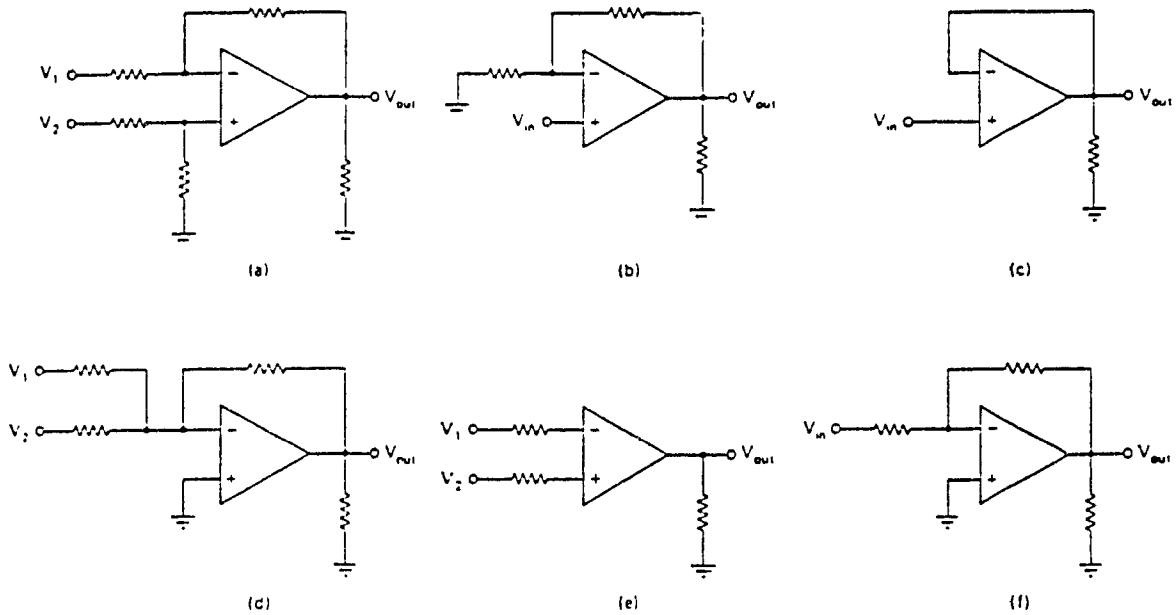

Match the names in the following questions with their proper schematic diagram above.

15 Inverting amplifier _____

16 Summing amplifier _____

17 COmparator _____

18 Difference amplifier _____

19 Voltage follower _____

20 Noninverting amplifier _____

DATE _____

COLLEGE _____

LAB _____

OBSERVER _____

DI	GIVING DIRECTIONS
HS	ASKING FOR HELP/ANSWER FROM STUDENT(S)
HT	ASKING FOR HELP/ANSWER FROM TEACHER
AN	GIVING SHORT ANSWER (NO ELABORATION)
EL	GIVING EXPLANATION OR ELABORATION
SU	SUGGESTING/GUESSING
TE	TRIAL & ERROR
CH	CHECKING
CO	COLLABORATING
LI	LISTENING
TA	TALK ALOUD REVEALING PROBLEM SOLVING STRATEGY
OF	OFF-TASK BEHAVIOR

STUDENT	OBSERVATION 1	OBSERVATION 2	OBSERVATION 3

Figure A-1 Modified Behaviour Observation Scheme as Used

GP A

DATE [illegible]

COLLEGE [illegible]

LAB [illegible]

OBSERVER [illegible]

(TR.)
DI GIVING DIRECTIONS
HS ASKING FOR HELP/ANSWER FROM STUDENT(S)
HT ASKING FOR HELP/ANSWER FROM TEACHER
AN GIVING SHORT ANSWER (NO ELABORATION)
EL GIVING EXPLANATION OR ELABORATION
CH CHECKING
(CO) COLLABORATING
BP -BELITTLING PEERS
~~ON ON-TASK BEHAVIOR~~
OF OFF-TASK BEHAVIOR
LI LISTENING IN
~~BE DEPARTING FROM ROOM~~
(TA)

(37 total

STUDENT	OBSERVATION 1	OBSERVATION 2	OBSERVATION 3
[illegible]	[illegible]	(CO) (EL)	
[illegible]	[illegible]	(LI) (HS)	
[illegible]	[illegible]	[illegible]	
[illegible]	[illegible]	HT (AN)	
[illegible]	[illegible]	ON - (CO)	
[illegible]	[illegible]	ON - (CO)	
[illegible]	[illegible]	ON - (CO)	
[illegible]			
[illegible]	[illegible]	AN (CO)	
[illegible]	[illegible]	HS (CO)	
[illegible]	[illegible]	[illegible] (CO)	
[illegible]	[illegible]	[illegible]	
[illegible]	[illegible] HT	DI HT CH TA	

Figure A-2 Observation of Group A in Simulation Lab 1

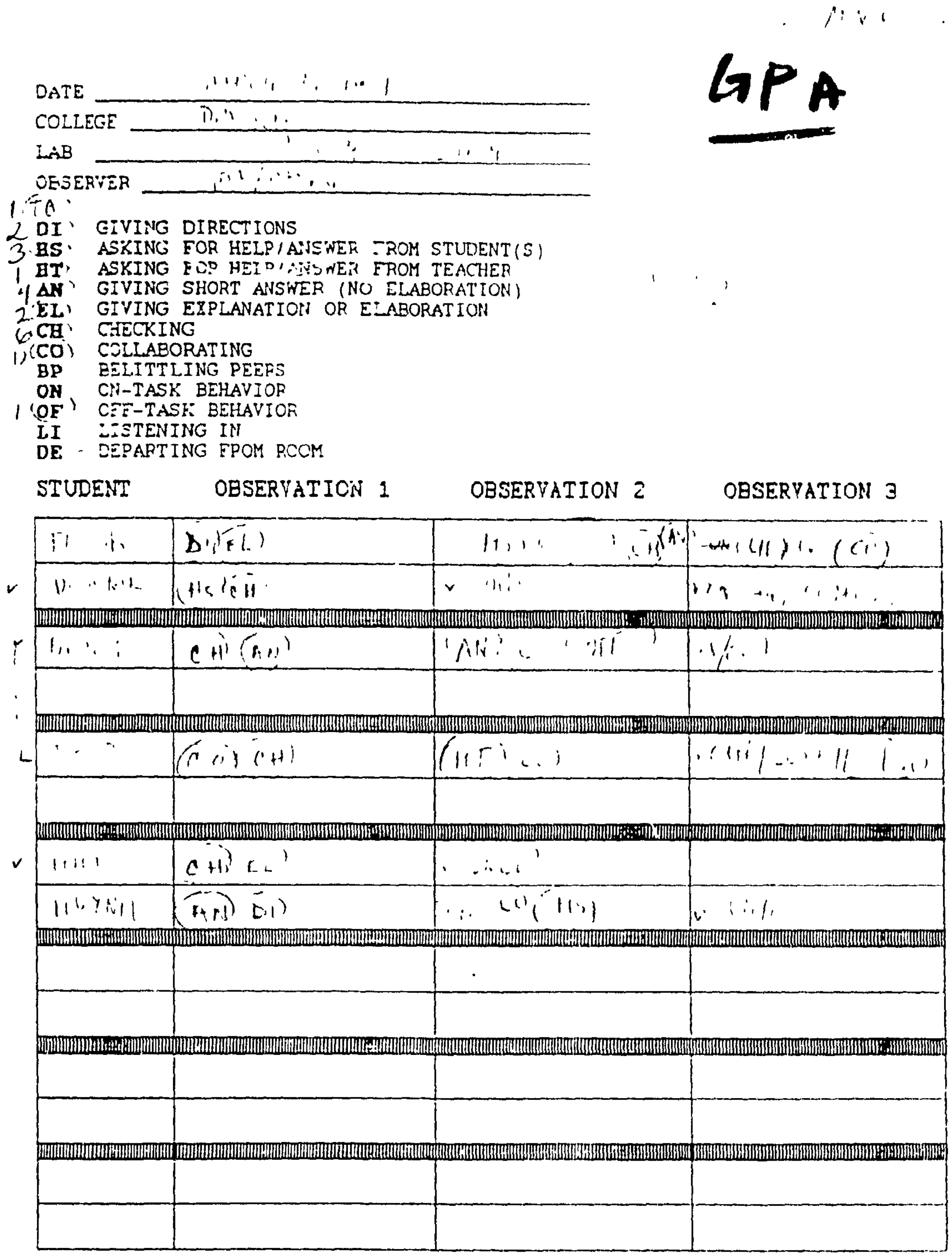

GPA

DATE [illegible]

COLLEGE [illegible]

LAB [illegible]

OBSERVER [illegible]

1 TA
2 **DI** GIVING DIRECTIONS
3 **HS** ASKING FOR HELP/ANSWER FROM STUDENT(S)
1 **HT** ASKING FOR HELP/ANSWER FROM TEACHER
4 **AN** GIVING SHORT ANSWER (NO ELABORATION)
2 **EL** GIVING EXPLANATION OR ELABORATION
6 **CH** CHECKING
11 **(CO)** COLLABORATING
BP BELITTLING PEERS
ON ON-TASK BEHAVIOR
1 **(OF)** OFF-TASK BEHAVIOR
LI LISTENING IN
DE DEPARTING FROM ROOM

STUDENT	OBSERVATION 1	OBSERVATION 2	OBSERVATION 3
[illegible]	DI (EL)	[illegible]	[illegible] (CO)
✓ [illegible]	(HS (CH	[illegible]	[illegible]
[illegible]	CH (AN)	AN [illegible]	[illegible]
[illegible]	(CO) (CH)	(HT [illegible]	[illegible]
✓ [illegible]	CH EL	[illegible]	
[illegible]	(AN) DI	[illegible] (HS)	[illegible]

Figure A-3 Observation of Group A in Simulation Lab 1

DATE 20th March 1991

COLLEGE Lansing College

LAB Lab 9

OBSERVER [illegible]

DI GIVING DIRECTIONS
HS ASKING FOR HELP/ANSWER FROM STUDENT(S)
HT ASKING FOR HELP/ANSWER FROM TEACHER
AN GIVING SHORT ANSWER (NO ELABORATION)
EL GIVING EXPLANATION OR ELABORATION
SU SUGGESTING/GUESSING
TR TRIAL & ERROR
CH CHECKING [illegible]
CO COLLABORATING
LI LISTENING
TA TALK ALOUD REVEALING PROBLEM SOLVING STRATEGY
OF OFF-TASK BEHAVIOR

STUDENT	OBSERVATION 1	OBSERVATION 2	OBSERVATION 3
R1 A	Working Alone ON	Working Alone ON	
R1 B			
R2 A	CH: CO: TA	CH: TA: EL	
R2 B	CH: CO: TA	CH: TA: CH	
R3 A	Working Alone ON	Working Alone	
R3 B			
R4 A	CH: AN: TA	TA: CH:	
R4 B	CH: HS: TA	TA: SU:	
R5 A	ON Working Alone	CH: TA	
R5 B	OF	CH: TA	
[illegible]			
[illegible]			

Figure A-4 Observation of Group B in Hands-on Lab 1

DATE 20th March 1991

COLLEGE Lawson College

LAB Lab 4

OBSERVER Dawn

1 DI GIVING DIRECTIONS
HS ASKING FOR HELP/ANSWER FROM STUDENT(S)
1 HT ASKING FOR HELP/ANSWER FROM TEACHER
1 AN GIVING SHORT ANSWER (NO ELABORATION)
2 EL GIVING EXPLANATION OR ELABORATION
3 SU SUGGESTING/GUESSING
4 TR TRIAL & ERROR
9 CH CHECKING
3 CO COLLABORATING
1 LI LISTENING
2 TA TALK ALOUD REVEALING PROBLEM SOLVING STRATEGY
OF OFF-TASK BEHAVIOR

STUDENT	OBSERVATION 1	OBSERVATION 2	OBSERVATION 3
M1 A	CH TA		
M1 B	CH		
M2 A	Working Alone		
M2 B			
M3 A	TA DI		
M3 B	CH CO		
M4 A	Working alone	working al..	
M4 B			
M5 A	CH (SU) TA	HT CH TA	
M5 B	TR CH TA	AN SU TA	
L1 A	(1) TA CH TR		
L1 B	CH TA CO EL		
L2 A	CH TA EL		
L2 B	SU CO TR.		

Figure A-5 Observation of Group B in Hands-on Lab 1

DATE 20th March 1991

COLLEGE Davidson College

LAB Lab 1

OBSERVER [illegible]

Gp B

Next class

DI GIVING DIRECTIONS
HS ASKING FOR HELP/ANSWER FROM STUDENT(S)
HT ASKING FOR HELP/ANSWER FROM TEACHER
AN GIVING SHORT ANSWER (NO ELABORATION)
EL GIVING EXPLANATION OR ELABORATION
SU SUGGESTING/GUESSING
TR TRIAL & ERROR
CH CHECKING
CO COLLABORATING
LI LISTENING
TA TALK ALOUD REVEALING PROBLEM SOLVING STRATEGY
OF OFF-TASK BEHAVIOR

STUDENT	OBSERVATION 1	OBSERVATION 2	OBSERVATION 3
M1 A	SU TA		
M1 B	TR CH		
M2 A			
M2 B			

Figure A-6 Observation of Group B in Hands-on Lab 1

DATE [illegible]
COLLEGE [illegible]
LAB [illegible]
OBSERVER IDA

DI GIVING DIRECTIONS
HS ASKING FOR HELP/ANSWER FROM STUDENT(S)
HT ASKING FOR HELP/ANSWER FROM TEACHER
AN GIVING SHORT ANSWER (NO ELABORATION)
EL GIVING EXPLANATION OR ELABORATION
SU SUGGESTING/GUESSING
TR TRIAL & ERROR
CH CHECKING
CO COLLABORATING
LI LISTENING
TA TALK ALOUD REVEALING PROBLEM SOLVING STRATEGY
OF OFF-TASK BEHAVIOR

STUDENT	OBSERVATION 1	OBSERVATION 2	OBSERVATION 3
R1 a	[illegible]		
R1 b	—		
R2 a	CO CH CO		
R2 b	CO CH CO		
R3 a	[illegible]		
R3 b	CH [illegible]		
R4 a	CO SU		
R4 b	CH HS		
R5 a	[illegible]		
R5 b	[illegible]		
M1 a	[illegible]	[illegible]	
M1 b	[illegible]	[illegible]	
M2 a	[illegible]	[illegible]	
M2 b	[illegible]	—	

Figure A-7 Observation of Group B in Hands-on Lab 1

DATE [illegible]

COLLEGE [illegible]

LAB [illegible]

OBSERVER [illegible]

DI GIVING DIRECTIONS
HS ASKING FOR HELP/ANSWER FROM STUDENT(S)
HT ASKING FOR HELP/ANSWER FROM TEACHER
AN GIVING SHORT ANSWER (NO ELABORATION)
EL GIVING EXPLANATION OR ELABORATION
SU SUGGESTING/GUESSING
TR TRIAL & ERROR
CH CHECKING
CO COLLABORATING
LI LISTENING
TA TALK ALOUD REVEALING PROBLEM SOLVING STRATEGY
OF OFF-TASK BEHAVIOR

STUDENT	OBSERVATION 1	OBSERVATION 2	OBSERVATION 3
M3a	[illegible]	[illegible]	
M3b	[illegible]	[illegible]	
M4			
M4b	[illegible]		
M5a	[illegible]		
M5b	[illegible]		
L1a	[illegible]	[illegible]	
L1b	[illegible]	[illegible]	
L2a	[illegible]	[illegible]	
L2b	[illegible]	[illegible]	

Figure A-8 Observation of Group B Hands-on Lab 1

DATE [illegible]

COLLEGE [illegible]

LAB [illegible]

OBSERVER [illegible]

11 - 4 - 91

Gp. B.

6 - DI GIVING DIRECTIONS
2 - HS ASKING FOR HELP/ANSWER FROM STUDENT(S)
5 - HT ASKING FOR HELP/ANSWER FROM TEACHER
3 - AN GIVING SHORT ANSWER (NO ELABORATION)
2 - EL GIVING EXPLANATION OR ELABORATION
5 - SU SUGGESTING/GUESSING
11 - TR TRIAL & ERROR
11 - CH CHECKING
11 - CO COLLABORATING
9 - LI LISTENING
7 - TA TALK ALOUD REVEALING PROBLEM SOLVING STRATEGY
2 - OF OFF-TASK BEHAVIOR

STUDENT	OBSERVATION 1	OBSERVATION 2	OBSERVATION 3
L	[illegible]	[illegible]	
R	[illegible]	[illegible]	
L	[illegible]	[illegible]	
R	[illegible]	[illegible]	
L	[illegible]	[illegible]	
R	[illegible]	[illegible]	
L	[illegible]	[illegible]	
R	[illegible]	[illegible]	
L	[illegible]	[illegible]	
R	[illegible]	[illegible]	

Figure A-9 Observation of Group B in Simulation Lab 1

DATE [illegible]

COLLEGE [illegible]

LAB [illegible]

OBSERVER [illegible]

11-4-91

GP. B.

DI GIVING DIRECTIONS
HS ASKING FOR HELP/ANSWER FROM STUDENT(S)
HT ASKING FOR HELP/ANSWER FROM TEACHER
AN GIVING SHORT ANSWER (NO ELABORATION)
EL GIVING EXPLANATION OR ELABORATION
SU SUGGESTING/GUESSING
TR TRIAL & ERROR
CH CHECKING
CO COLLABORATING
LI LISTENING
TA TALK ALOUD REVEALING PROBLEM SOLVING STRATEGY
OF OFF-TASK BEHAVIOR

STUDENT	OBSERVATION 1	OBSERVATION 2	OBSERVATION 3
[illegible]	[illegible]		
[illegible]	[illegible]		
[illegible]	[illegible]	[illegible]	
[illegible]	[illegible]	[illegible]	
[illegible]	[illegible]	[illegible]	
[illegible]	[illegible]	OF	
[illegible]	[illegible]	[illegible]	
[illegible]	[illegible]	[illegible]	
[illegible]	[illegible]		
[illegible]	[illegible]		

[illegible] points other than partner

[illegible]

[illegible] min.

Figure A-10 Observation of Group B in Simulation Lab 1

APPENDIX B

Simulation Package Guide and Laboratory Exercises

Guide to Use OrCAD/SDT III & PSPICE Packages

A. Introduction.

OrCAD/SDT III is a complete and flexible schematic capture package. Easy to use menu driven commands help to create, edit, save, print, and plot electronic schematics. The NETLIST file, which is a compiler, can be used to compile any schematic file created by OrCAD/SDT III to a text file that can be used afterwards as an input to the SPICE circuit simulator.

B. Invoking commands.

Invoking commands can be done in two ways:

i) by pressing the first letter of the command menu. It is not necessary for the command menu to be displayed on the screen; or

ii) by selecting the command or sub-command from the menu moving the highlighted bar over it and pressing <ENTER>.

C. Main features of OrCAD/SDT III.

Some of the main capabilities of the package include:

- creating a new worksheet file;
- loading worksheet file;
- saving worksheet to a file;
- updating a file;
- exiting DRAFT;
- printing a file;
- plotting a file;

All these commands can be selected from a MENU which you can access by pressing <ENTER>.

D. OrCAD/SDT III libraries.

OrCAD/SDT III software package supplies a number of part libraries. These libraries are shipped as library data files. This is more convenient because data files are ready to use also they take less disk space. A library source file takes up much more disk space than its corresponding library data file. Part of configuring OrCAD/SDT III involves choosing what libraries it will have access to. The chosen libraries at configuration time are loaded into RAM whenever the program DRAFT is executed. This eliminates disk searching and provides for quick part retrieval. By convention, library names end with the file extension .LIB.

E. OrCAD/SDT III and SPICE.

OrCAD/SDT III can create a netlist that SPICE (PSPICE) will accept. However, the size of the netlist is limited by the available system memory. As NETLIST runs, it processes each schematic file separately. The limit with 640K bytes of system memory is 8,000 wire segments and about 2,000 to 10,000 device pins per schematic file. This includes only those objects on a single sheet.

The process of interfacing the two programs is not very difficult to understand. However, care should be taken when models, schematic files, or sub-circuits are used, since the compiler (NETLIST.EXE) processes the information without knowing if the parts and the schematic files really do represent the circuit that the user wants to simulate. Knowledge of how the two software packages are interfaced is required and also experience to get all the benefits of the proposed setup.

The part value of any device in the design is used to pass modelling information to the netlist. Specifically, the value of a resistor has to be typed in the "part value" command. Labels are used to connect signals together from one worksheet area to another without using wires or buses. Ground as a schematic symbol , or as a "0" must be used as a reference.

II. CREATING A CIRCUIT AND EXECUTING SPICE.

When the schematic file FILENAME.SCH is created by executing OC.BAT and by using OrCAD/SDT III commands from the menu to draw the circuit, the netlist of the circuit can be created. To do so, the NL.BAT file has to be executed followed by the name of the file without any extension. The compiler NETLIST.EXE provided by the OrCAD/SDT III software package translates all the information included in the schematic file FILENAME.SCH to a text file (list of commands - FILENAME.CIR) recognizable by PSPICE1.EXE compiler.

Automatically, if there are no drawing errors involved, the PSPICE1.EXE is executed and the circuit is being simulated according to the SPICE (PSPICE) commands such as .TRAN, .AC, .DC, etc. The data are sent to the PROBE.DAT file and in case that there are no convergence problems or other difficulties, the screen menu of the PROBE.EXE file is displayed. Information concerning the circuit being simulated can be obtained by using the menu of this program (PROBE.EXE). As it was previously mentioned, the output appears plotted on the screen in much the same way it would appear on an oscilloscope.

III. MODIFYING THE SCHEMATIC FILE.

Modifications and corrections are usually required at the design and performance verification stage for a schematic file previously drawn. These modifications can typically include:

i) erasing of a component

ii) addition of a component

iii) change in the value of a component i.e. modification in the value of a resistor, etc.

iv) change of the integration time step, in the initial and the final value of the simulation time.

v) change in connections and nodes

For all the above mentioned steps, the OrCAD/SDT III program can be used. This is an easy procedure and becomes even easier with experience since OrCAD/SDT III is a menu driven software package.

When modifications are completed and stored under an updated FILENAME.SCH file, the batch file NL.BAT is run to create a new FILENAME.CIR file, and then proceed to run PSPICE1.EXE and PROBE.EXE.

NOTE: The actual drawing of the circuit is mainly a convenient for the user to maximize time they will have to spend, programming in PSPICE. What actually counts for the OrCAD/SPICE package are the components and node (connections), designation letters and numbers (labels). All these must be correct for SPICE to be executed.

PROCEDURE FOR OrCAD/PSPICE SIMULATION FOR LAB #4 DIFFERENTIAL CONNECTION

CHECK CIRCUIT DIAGRAMS AT THE BACK

Steps:

1. Turn the computer on and boot onto **Hard Drive C:** (This package is not yet in the NetWork System).

2. Enter the following command on the C prompt (**C:>**): i.e.

   C:>cd LAB and press ENTER.

   This command will locate you into the sub-directory LAB, from which you will be able to draw new circuits review old ones, and run the PSPICE simulation. The prompt will change to **C:\LAB>**.

3. At the new prompt enter the following:

   C:\LAB>**oc lab4** and press ENTER.

   This command will activate OrCAD.

   Press ENTER twice and existing circuit called LAB4 will appear on screen. If the circuit does not exist, you will get a blank screen indicating that it is a new worksheet.

   You can now move around with the mouse or use the cursor to view the whole circuit. Also you can make modifications where necessary.

4. Type in **Q** - to quit the worksheet

   Then type **U** - this updates the circuit.

   And then type **A** - this quits OrCAD, and returns you to the sub-directory prompt **C:\LAB>**

5. Enter the following:

   C:\LAB>**nl lab4** and press ENTER.

   This command will activate the OrCAD NetList compiler, converts the circuit into a programme that PSPICE understands, and then generates PSPICE simulation if there are no errors detected.

You should now **WAIT** for the calculations to be completed and probe is activated.

***** THIS WILL TAKE SOME TIME SO BE PATIENT *****

6. When **PROBE** is activated, follow the instructions as per the **MENU**.

   Type 1 and enter the following:

   V(3) V(4) V(5) then press ENTER

   This command will give the INPUT voltages at points 3 & 4, and the OUTput voltage at point 5, as shown on the circuit diagram.

   You can play around with the axis settings using the **MENU**, to see what types of changes are registered in the waveforms.

   You can also see what the voltage readings are at other points in the circuit, using the same parameters as above, i.e. V(1) V(2) etc.

7. Record your measurements, and exit PROBE. by pressing "0" until you are back in the sub-directory LAB i.e. **C:\LAB>**

8. Repeat step 3, change the value of the resistor **Rpot**.

   Proceed with steps 4 to 7.

9. Do step 3 again, but this time in place of "LAB4" type **LAB4B** (i.e "oc lab4b").

   Proceed with steps 4 to 7, using "**LAB4B**"

10. Repeat step 9, change the DC sweep parameters in the text section.

    The parameter to change is:

    .DC vin -12 12 .2 change to **.DC vin -3 3 .2**

    Proceed with steps 4 to 7, using "**LAB4B**"

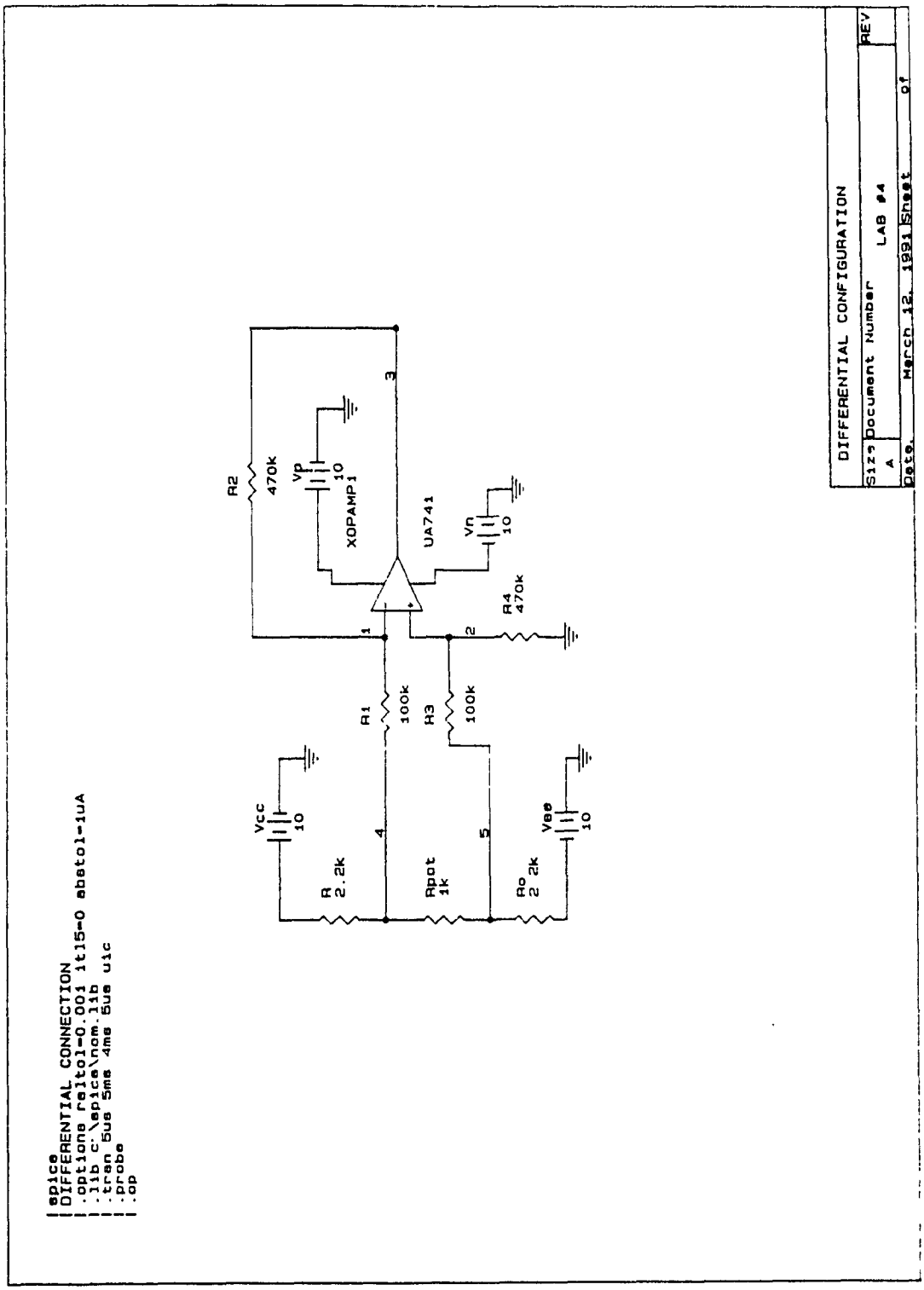

Figure B-1 Simulation Lab 1 Circuit 1

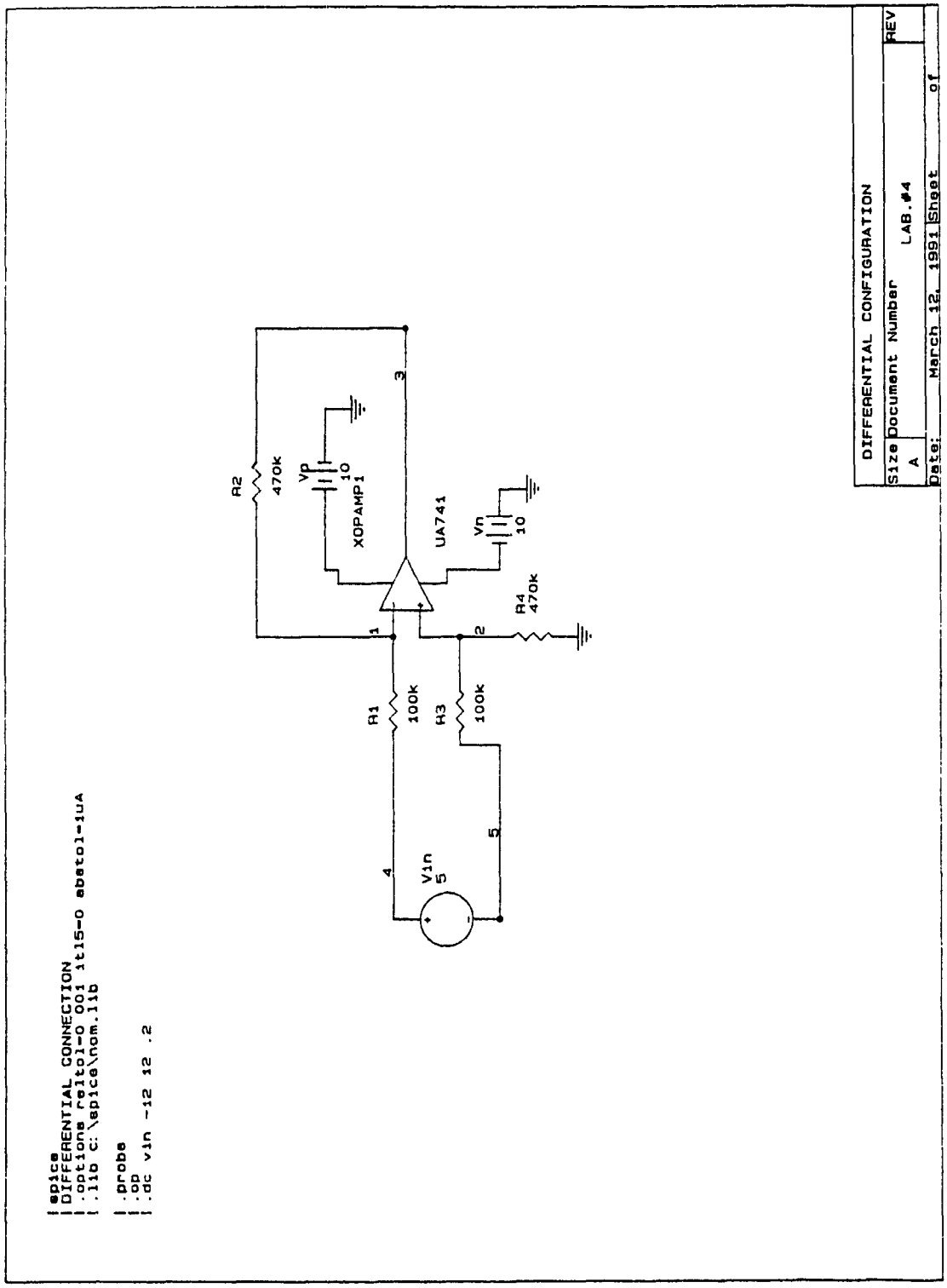

Figure B-2 Simulation Lab 1 Circuit 2

DAWSON COLLEGE EXP #4

243 - 480

DIFFERENTIAL CONNECTION

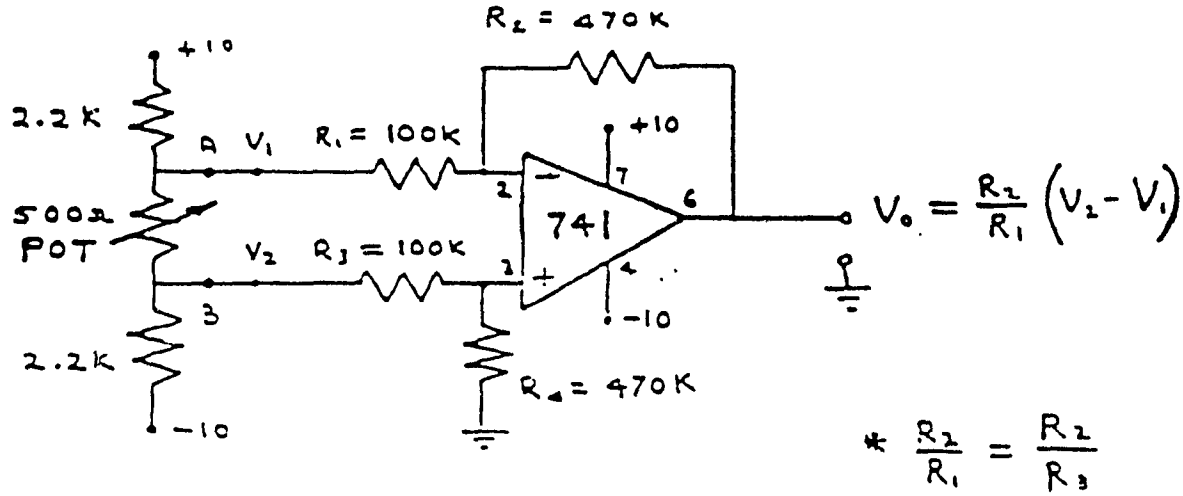

PURPOSE: To plot the transfer chacteristics of an Op Amp in differential configuration.

EQUIPMENT:
1) Split rail supply
2) Oscilloscope
3) V. O. M.
4) LVPS
5) Function Generator

PROCEDURE:
1) Plot Vo vs. (V2 - V1) in third quadrant by varying the potentiometer and measuring V1, V2, and Vo
2) Reverse A and B connections and plot the characteristics for the first quadrant.
3) Comment on linearity, any offsets at the origin, and saturation voltage.

Figure B-3 Hands-on Lab 1 Circuit 1

PROCEDURE FOR OrCAD/PSPICE SIMULATION FOR LAB #6 MULTIVIBRATOR

CHECK CIRCUIT DIAGRAMS AT THE BACK

Steps:

. Turn the computer on and boot onto **Hard Drive C:** (This package is not yet in the NetWork System).

2. Enter the following command on the C prompt (**C:>**): i.e.

   C:>cd LAB and press ENTER.

   This command will locate you into the sub directory LAB, from which you will be able to draw new circuits review old ones, and run the PSPICE simulation. The prompt will change to **C:\LAB>**.

3. At the new prompt enter the following:

   C:\LAB>**oc lab6** and press ENTER.

   This command will activate OrCAD.

   Press ENTER twice and the existing circuit called LAB4 will appear on screen. If the circuit does not exist, you will get a blank screen indicating that it is a new worksheet.

   You can now move around with the mouse or use the cursor to view the whole circuit. Also you can make modifications where necessary.

4. Type in **Q** - (to quit the worksheet.)

   Then type **U** - (this updates the circuit.)

   And then type **A** - (this quits OrCAD, and returns you to the current sub-directory prompt) **C:\LAB>**.

5. Type the following:

   C:\LAB>**nl lab6** and press ENTER.

   This command will activate the OrCAD NetList compiler, converts the circuit into a programme that PSPICE understands, and then generates PSPICE simulation if there are no errors detected.

You should now **WAIT** for the calculations to be completed and probe is activated.

***** THIS WILL TAKE SOME TIME SO BE PATIENT *****

6. When **PROBE** is activated, follow the instructions as per the **MENU**.

   Type 1 and enter the following:

   V(1) V(out) then press ENTER

   This command will give the INPUT voltage at point (1), and the OUTPUT voltage at point (out), as shown on the circuit diagram.

   You can play around with the axis settings using the **MENU**, to see what types of changes are registered in the waveforms.

   You can also see what the voltage readings are at other points in the circuit, using the same parameters as above, i.e. V(2) V(3) etc.

7. Record your measurements, and exit PROBE. by pressing "0" until you are back in the sub-directory LAB i.e. **C:\LAB>**

8. Repeat step 3, change the value of the resistors R5 & R6 to give a K1 factor of 50

   Where K1 = R5/R6 -- remember that P2 = R5 + R6 = 100kΩ

   Proceed with steps 4 to 7.

9. Repeat step 3, and change the value of the capacitor **C1 to .1uF**
   Adjust resistors R1 and R2 to get a 50% duty cycle and proceed with steps 4 to 8.

   Repeat the above procedures with C1 = 1uF.

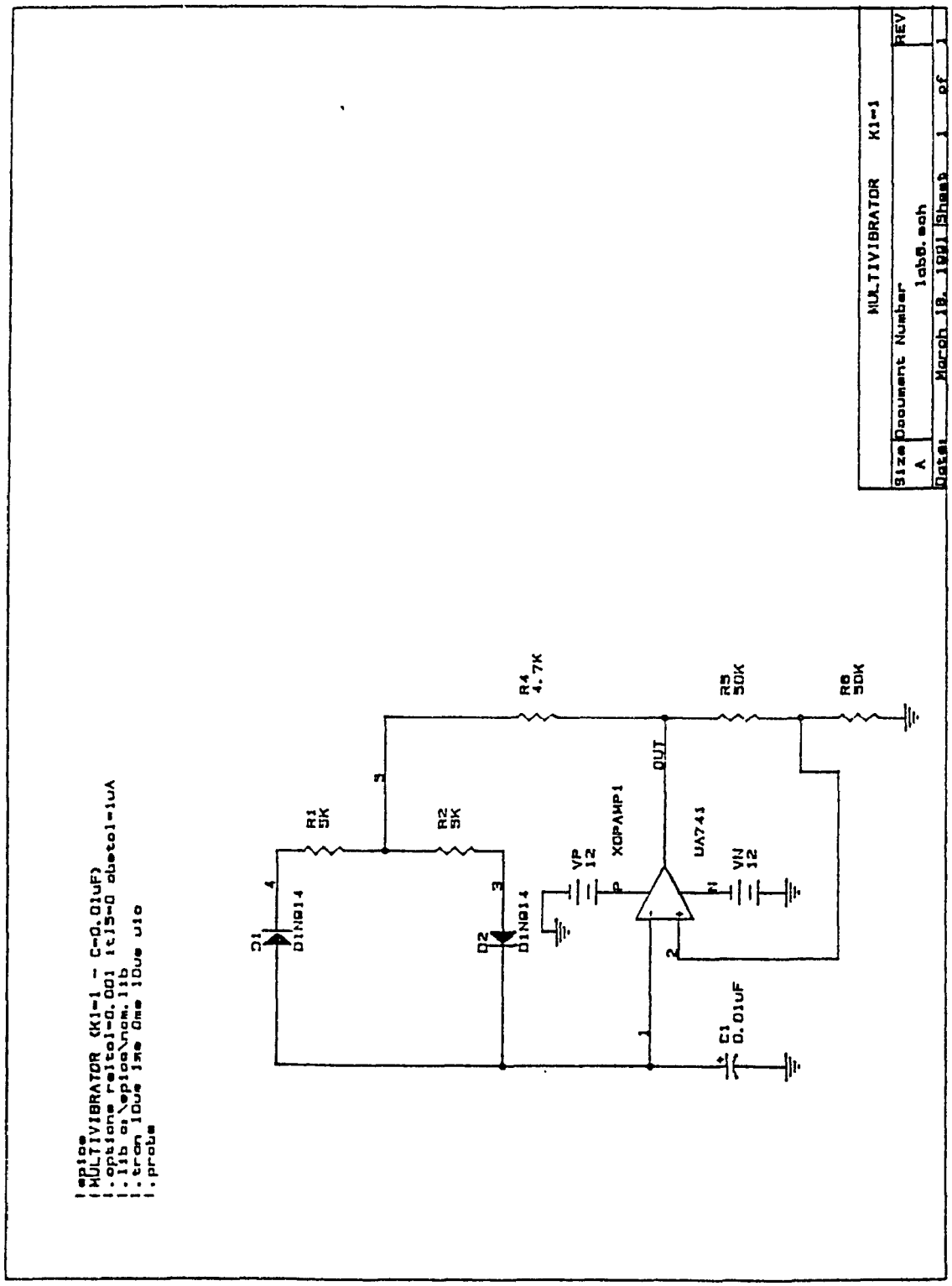

Figure B-4 Simulation Lab 2 Circuit 1

DAWSON COLLEGE

EXP #6

243 - 460

MULTIVIBRATOR

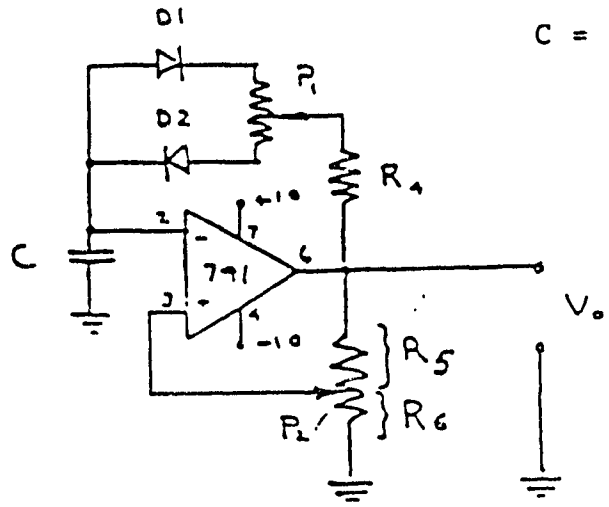

C = .01uf
P1 = 10k
P1 = 100k
R4 = 4.7k

K1 = R5/R6

PURPOSE: To plot performance graphs of a multivibrator with variable duty cycle and frequency.

EQUIPMENT:
1) Split rail supply
2) LVPS
3) Oscilloscope
4) Frequency counter
5) Capacitance bridge

PROCEDURE:
1) Adjust P1 for a duty cycle of 50%. Determine the range of frequencies available by adjusting P2.
2) REPEAT WITH C = .1uf, .001uf, 1uf.
3) PLOT A GRAPH OF f vs K1

Figure B-5 Hands-on Lab 2 Circuit 1