Throughput Analysis of CSMA/CF Systems

Van Phuc Trach Phung

A Thesis

in

The Department

of

Electrical and Computer Engineering

Presented in Partial Fulfillment of the Requirements
for the Degree of Master of Engineering at
Concordia University
Montreal, Quebec, Canada

November 1987

ISBN 0-315-50103-0

ABSTRACT

Throughput Analysis for CSMA/CF Systems

Van Phuc Trach Phung

In the perfect scheduler case, a persistent strategy yields better throughput. On the contrary, the non-persistent Carrier Sense Multiple Access (CSMA) scheme outperforms its persistent counterpart. The reason behind this drawback is that packets accumulated during the current transmission compete against each other at the end of this transmission. This results into a drop in throughput. In this work, a study of a CSMA's collision free variation (CSMA/CF) will be presented. This new protocol allows a second contention period when the first fails to produce a winner. In effect, utilization is improved. An interesting result obtained is that the persistent variation of this protocol performs better than the non-persistent one. This property moves CSMA/CF ahead of CSMA/CD and closer to the perfect scheduler. In this thesis, an analytical method is proposed to calculate the throughput of the CSMA/CF protocol. This method can be used to obtain the CSMA and prescheduling CSMA variation throughputs.

ACKNOWLEDGEMENTS

I would like to express my gratitude to my supervisor, Professor N. Dimopoulos, for his patient guidance and support. I would also like to thank the National Science and Engineering Research Council of Canada, the Centre de Recherche Informatique de Montreal for providing me with postgraduate scholarships and the Department of Electrical Engineering, Concordia University for providing me with the Teaching Fellowship. Many thanks to my parents for their understanding and encouragement. Many professors at Concordia University have influenced my work through discussions and courses. Among them, I would like to express my deepest gratitude to Professor J.F. Hayes.

TABLE OF CONTENTS

LIST OF FIGURES

LIST OF TABLES

CHAPTER I
INTRODUCTION

Nowadays, single centralized computers are being replaced by interconnected machines. There are many reasons which make people more interested in networking. First of all, interconnecting machines permit information sharing between computer systems despite geographical locations. Things like databases, programs, data, etc... can be used by several users at different locations. Internetworking also improves the reliability of computer services. Failing one processor affects slightly the performance of a network of computers while it can paralyze an isolated computer. Another reason behind this change is the relative cost of computers comparing to communications keeps decreasing. A decade ago, computers were much more expensive compared to communication means while today high performance mini and microcomputers are getting cheaper. Finally, interconnecting processors can solve problems in a parallel way and offers higher price/performance ratio to expensive supercomputers.

Depending on the distance between processors/computers and the degree of their autonomy, interconnecting processors/computers are classified into different classes. Table 1.1 [Tan81] shows this classification.

Computer networks are also classified into circuit, packet and message switching networks depending on the switching techniques they employ. Circuit switching establishes a physical channel between hosts while message switching uses a virtual channel which changes dynamically. Packet switching divides messages into fixed size packets and routes them to the destination where they will be reassembled.

Because we deal with multiprocessor systems and local area network in this thesis, they will be discussed in the following sections. Detail on data flow machines and long haul networks can be found in [Hwa84] and [Tan81] respectively.

Interprocessor distance	Processors located in same	Example
0.1m 1m	Circuit board System	Data flow machine Multiprocessor
10m 100m 1km	Room Building Campus	Local area network
10km 100km	City Country	Long haul network
1000km 10000km	Continent Planet	Interconnection of long haul networks

Table 1.1 Classification of interconnected processors

1.1 LOCAL AREA NETWORK

Computer communication networks can be classified into two classes, LAN (Local Area Networks) and wide area networks (or long haul networks). LANs are limited into a small geographical area, typically within 1 km. On the contrary, wide area networks can be extended over the globe.

In general, computer communication networks can be classified into two categories, point-to-point (or carry and forward) networks and broadcasting (multipoint) networks. In point to point networks, a physical link is connected between a pair of computers (or hosts). Hosts which are not connected directly by links can communicate with each other via other hosts. A path formed by intermediate hosts will connect two distant hosts and

these hosts will store and forward messages until they reach their destination. Figure 1.1.1 shows some possible topologies for a point to point network.

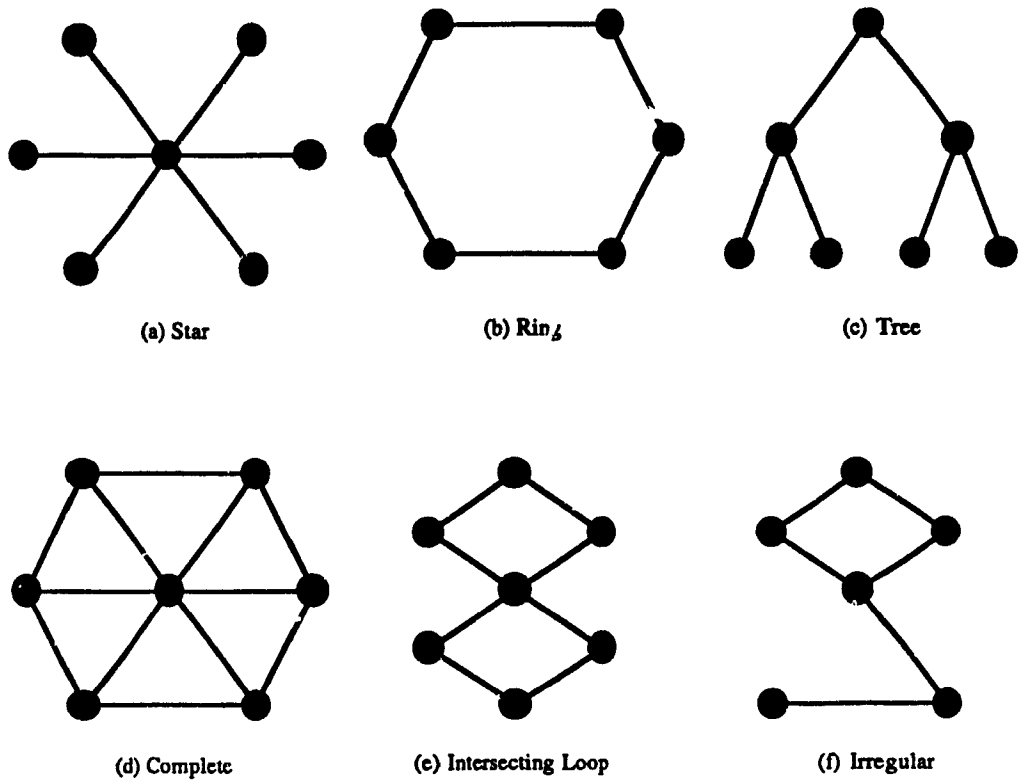

Figure 1.1.1 Point to point network topologies

The second category is broadcasting networks. In this class, a common channel is shared between hosts. Any host can listen to messages broadcasted by others. Broadcasting networks use three typical systems : bus, radio or satellite and ring. Figure 1.1.2 shows these broadcasting systems. In a broadcasting network, only one host can transmit at one time. A conflict resolution scheme has to be defined.

Since in computer communication networks, every function has to be handled by computers such as request for transmission, error checking, conflict resolution, etc. protocols have been defined. One of the major frameworks for protocol design is the OSI (Open Systems Interconnection) defined by the International Standards Organization. OSI

consists of several layers. The functions of these layers and the interfaces between them are standardized. Figure 1.1.3 shows the 7 layers.

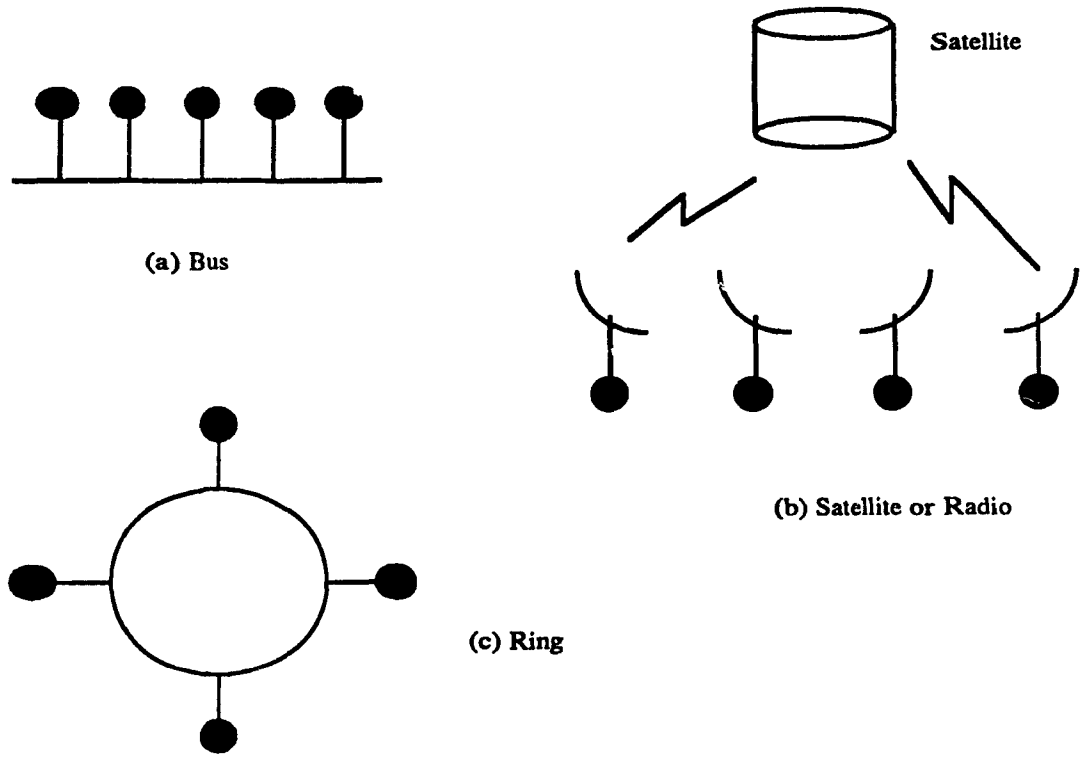

Figure 1.1.2 Broadcasting network

The lowest layer consists of the physical links used to carry electrical or optical signals. The transmission medium can be twisted pair, coaxial or fiber optic cable. Example of network using coaxial cable is Ethernet [Met76]. A recently developed network by Hayes et al. uses fiber obtics [Hay85]. The next layer is the link level which transforms the physical layer into an error free transmission channel (e.g. using error correcting codes, etc.). Flow control is the function of the next layer, network layer. It is concerned with routing and converting messages into fixed size packets in a packet switching network or conflict resolution in a broadcasting network. The next layer, transport, provides an error free message transportation system between ends. The user interface to the system is the session layer. It provides services such as transforming session addresses (known by

users) into transport addresses (know by transport layer), requesting transport connections, recovering from broken connections, etc.... The presentation layer provides data transformations, compressions, encryptions as well file format conversions. The final layer, application, is defined by each of the users depending on their applications.

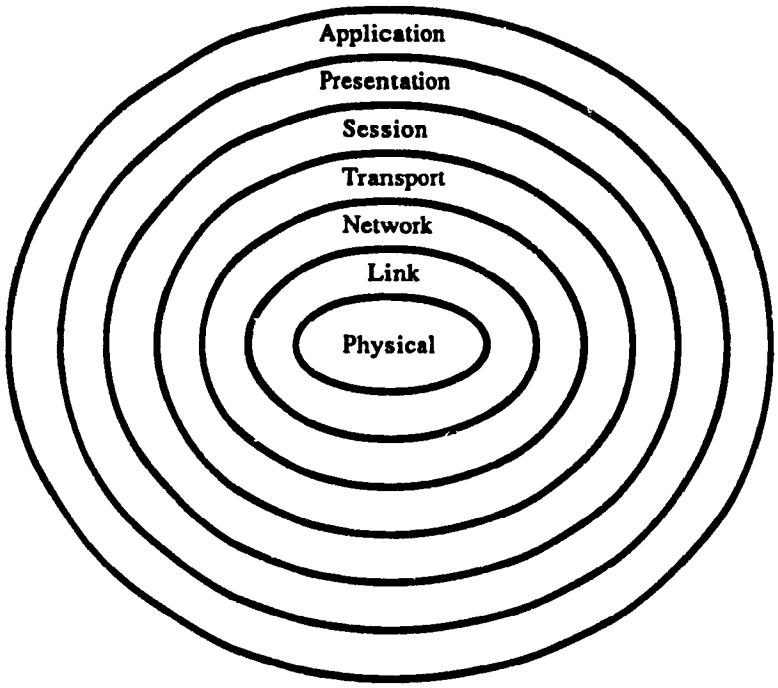

Figure 1.1.3 Seven layers of the OSI model

In the case of broadcasting networks, the function of the network layer is to resolve contention on the common channel. Several techniques have been proposed such as ALOHA [Abr70], CSMA [Kle75], CSMA/CD [Tob80]. ALOHA is a simple protocol where stations transmit regardless of the state of the channel while CSMA listens to the channel before transmitting. However, due to the signal propagation delay on the channel, conflicts may occur where a number of stations try to transmit at the same time. This situation affects the throughput of the channel. The CSMA/CD protocol tries to improve the bandwidth by detecting collisions and aborting the transmission as soon as a collision is

detected. A detailed discussion on CSMA/CD will be presented later in this chapter. Other protocols able to avoid channel conflict are bit map, binary tree search protocol [Tan81], etc. Unfortunately, these protocols require a central controller or are too complicated for LANs.

Network techniques are not used only in interconnecting autonomous computers but also in multiprocessor systems. In the next section, a short introduction to multiprocessor systems is presented.

1.2 MULTIPROCESSOR SYSTEMS

Interconnecting processors can be classified simply into two categories. The first class consists of interconnection of autonomous computers including LANs, long haul networks and interconnection of long haul networks. Data flow machines and multiprocessor systems belong to the second class where processors not only share information but also memories and resources.

Multiprocessor systems can be seen as clusters of functional units (including processors, control units, memories, etc...) which can process different streams of data and/or instructions at the same time. Depending on the multiplicity of functional units, multiprocessor systems are classified as SIMD[1] , MISD[2] and MIMD[3].. The main difference in these architectures is the way instructions and data are distributed to the processing elements. Figure 1.2.1-1.2.3 show SIMD, MISD and MIMD organizations respectively.

---

[1] Single Instruction stream, Multiple Data stream
[2] Multiple Instruction stream, Single Data stream
[3] Multiple Instruction stream, Multiple Data stream

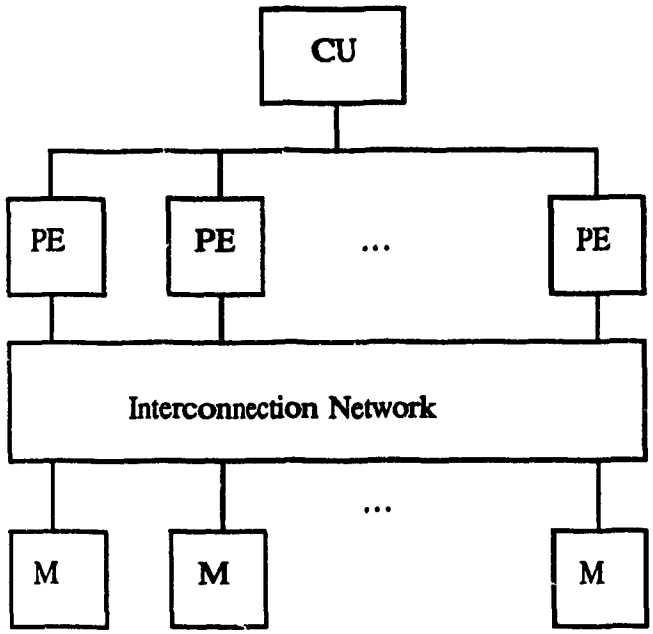

CU : Control Unit
PE : Processing Unit
M : Memory

Figure 1.2.1 SIMD architecture

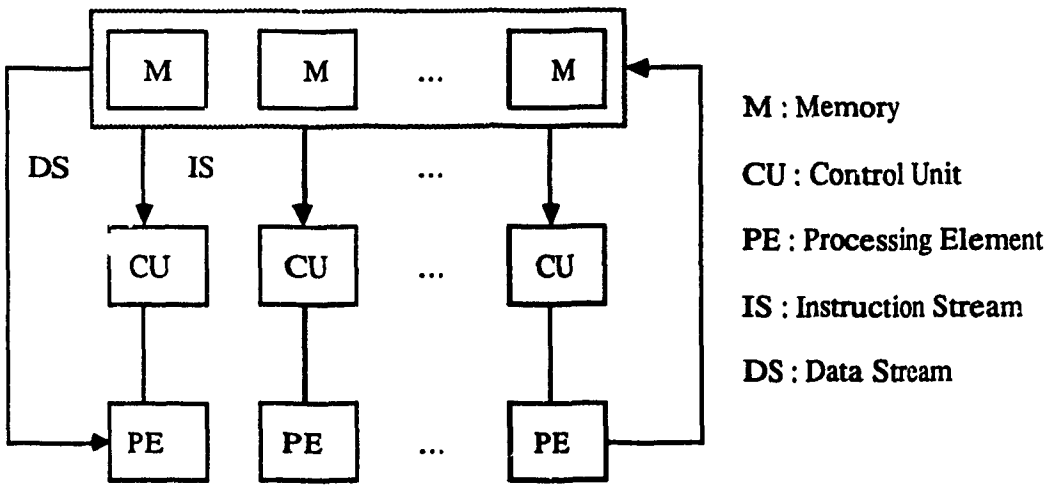

Figure 1.2.2 MISD architecture

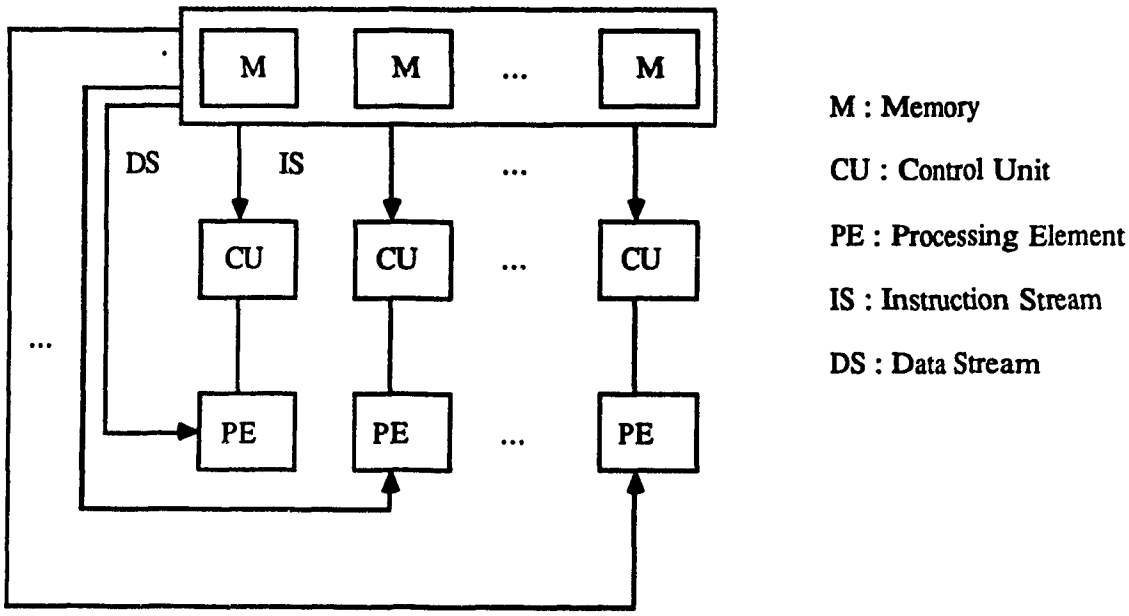

Figure 1.2.3 MIMD architecture

As we can see, SIMD machines execute a single instruction on different sets of data by using different processing units. On the other hand, MIMD machines perform several instructions on different sets of data by having many control units working at the same time. MISD computers execute different sets of instructions on a single data set. Examples of SIMD machines are Illiac IV [Bon72] and STARAN [Bat76]. Some existing MIMD machines are HEP [Smi78], C.mmp [Wol72], Cm* [Swa77, Swa77b]. There is no parallel computer at this moment which fits into the category of MISD machines.

MIMD architectures can be loosely coupled or closely coupled depending on whether the degree of interactions between processors is low or high, respectively. Most commercial MIMD computers are loosely coupled.

An important component in multiprocessor systems is the interconnection network. It facilitates interprocessor as well as processor-memory communications. Interconnection networks in loosely coupled and closely coupled MIMD machines are examples for the former and later cases, respectively. Interconnection networks can be blocking or non-

blocking. In blocking networks, trying to establish more than one connecting pair of processors (or processor-memory) may result in conflict. If a network can realize all possible connections between sources (processors) and destinations (processors or memories) it is non-blocking. Static networks can only connect a particular source to a particular destination in a fixed way while dynamic networks can have several alternatives.

Some interconnection networks are efficient in solving a certain class of problems while some are not (see [Kuc78]). Since non-blocking or highly specialized interconnection networks are expensive, people tend to use a simple but general interconnection network in multiprocessor systems. Some topologies used in LANs are also applied and one example is the H-network in the Homogeneous Multiprocessor System [Dim83, Dim83b, Dim85].

The Homogeneous Multiprocessor System lies in the middle of loosely coupled and tightly coupled multiprocessors. Figure 1.2.4 shows the architecture of the Homogeneous Multiprocessor System. It has local switches which permit processors to access memory modules of neighbor processors and the H-network which facilitates distant communications. The H-network has a bus topology and employs an access control scheme similar to the CSMA/CD scheme used in Ethernet [Met76]. In the next section, a description of the H-network and its access protocol will be discussed.

1.3 THE HOMOGENEOUS MULTIPROCESSOR SYSTEM

The Homogeneous Multiprocessor system consists of the Homogeneous Multiprocessor proper (HM proper) [Dim83,Dim85] and the H-network [Dim83b] as seen in figure 1.3.1. The HM proper is a tightly coupled MIMD machine which has k processors. Each processor has its own memory module connected through a local bus. Accesses to neighboring memory modules are allowed via a switch connecting two local buses. The operations of these switches are controlled by switch controllers distributively. Details on these switches and their algorithms are given in [Dim83].

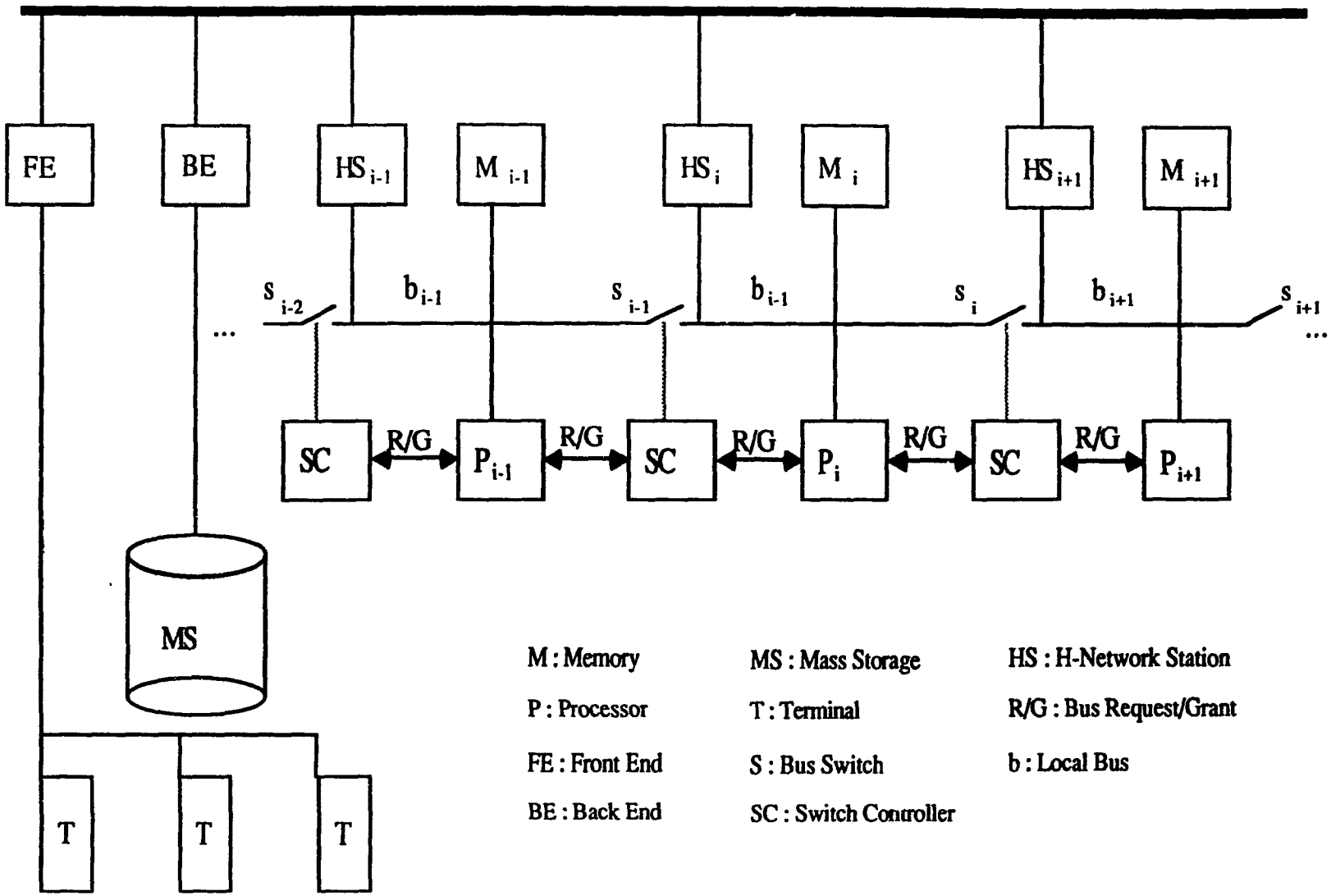

Figure 1.2.1 The Homogeneous Multiprocessor System

The H-network is a high speed packet switching local computer network. This network has a bus topology which belongs to the broadcasting network class. It is used to transfer data from and to the Homogeneous Multiprocessor as well as to exchange information between distant processors. The H-network resembles the Ethernet network [Met76]. However, the H-network employs different pathways for data transmission, network acquisition and collision detection. The present design of the H-network employs the CSMA/CD (Carrier Sense Multiple Access/Collision Detection) protocol for its network layer. A new collision free protocol has been proposed for improved throughput and packet delay of the H-network, namely the CSMA/CF (Common Sense Multiple Access/Collision Free) [Won85]. In the next section the CSMA/CD and CSMA/CF protocols will be discussed.

1.3.1 H-Network architecture

The H-network architecture is shown in figure 1.3.1.1. The following are the principal components of the H-Network.

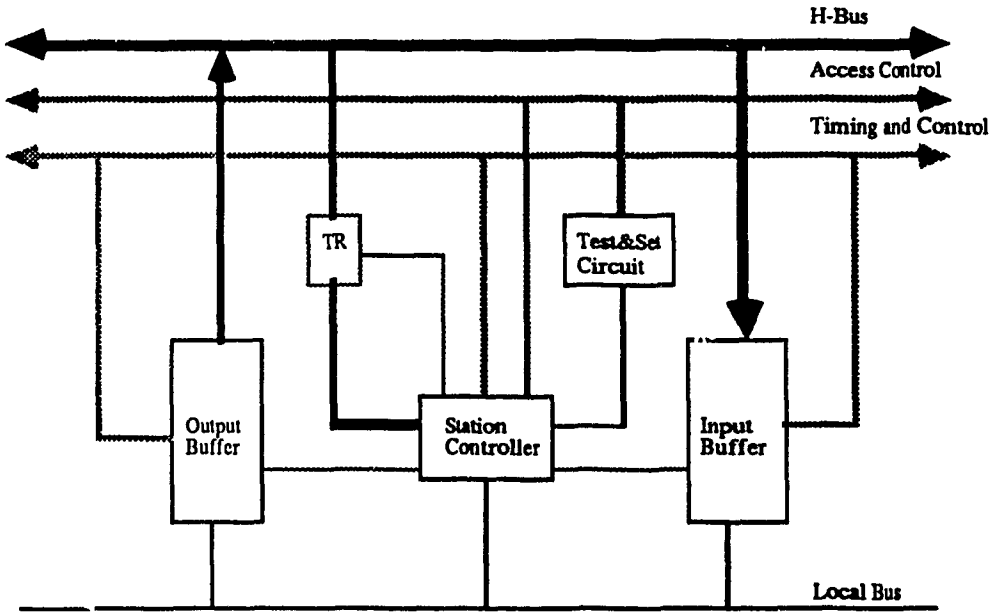

Figure 1.3.1.1 H-Station and Control Pathways

(a) The H-bus : a high speed data channel consisting of 16 data lines in the present implementation. It is used to transmit data packets.

(b) The Access Control bus : a group of access control lines used to support the Network layer protocol (Conflict resolution). The protocol is handled by the Network station (H-station).

(c) Timing and Control bus : a group of lines makes possible the actual transmission and the packet acquisition on the H-bus

1.3.2 Network layer protocols for the H-network

a. CSMA/CD

As mentioned earlier, the architecture of broadcasting networks results in the possibility of bus conflict. The network layer in this case provides a mechanism to avoid collisions on the bus. CSMA/CD is a simple protocol used in Ethernet [Met76]. Beside the data channel, an access channel is provided as a means of avoiding conflicts. This channel can take either of the two states : busy or idle reflecting whether the data channel is in use or not, respectively. According to this protocol, one node having a message must follow the following steps in order to access the bus.

Step 1 : Sense the access channel, if the access channel is busy go to step X.

Step 2 : Set the access channel to busy state by transmitting its carrier. Proceed to transmit data on the bus, at the same time try to detect collision by listening back the data transmitted. If a collision is detected, set access channel to idle state, abort transmission and wait for a random period. Go to step X.

Step 3 : Set access channel to idle state. Exit.

Step X : Depends on the persistency variations (explained later). Go to step 1.

There are 2 variations of the CSMA/CD protocol, namely nonpersistent, and 1-persistent. In nonpersistent CSMA/CD, step X is "Wait for a random period. Go to step 1". In the 1-persistent step X is simply "Go to step 1". The difference between the two is

that the 1-persistent variation persists on sensing the access channel when it is busy while the nonpersistent counterpart retries sensing at sometime later. In the case that the channel is slotted, CSMA/CD has one more variation, the p-persistent. In the p-persistent protocol, a message is transmitted in a slot with probability p.

Since the transition time between idle and busy states exists (due to propagation delay and switching time), two or more ready stations may sense the access channel idle and transmit at the same time. This results in a collision and throughput will be reduced, leaving the data channel idle when there are accumulated messages. In the 1-persistent variation, the situation is worse since stations persist on sensing the access channel. This situation characterizes the unstable property of the CSMA family of access protocols.

Let us consider now a fictitious perfect protocol where collisions do not exist. In this case, the data channel is idle only when there are no message waiting. Again, we consider nonpersistent and persistent cases. For the nonpersistent case, messages arriving when the data channel is busy will reschedule themselves at a random time later whereas messages persist on waiting in the 1-persistent case. Let λ the total Poisson arrival rate of messages we have the throughput S of both cases as following :

- non persistent : $S_0 = \dfrac{T}{T+1/\lambda}$
- one persistent : $S_1 = \dfrac{T}{T+q_{0T}/\lambda}$

where T is the transmission time and q_{0T} is the probability that no messages arrive during transmission. Since $q_{0T} < 1$, $S_0 < S_1$, i.e. in this perfect protocol, the non-persistent variation does not outperform the one persistent counterpart.

This discussion points out the disadvantage of the one persistent CSMA family of access protocols. If we can somehow eliminate the collision, the throughput of one-persistent CSMA/CD will be improved. In the next section, we study a variation of the CSMA/CD protocol proposed by Wong [Won85] in which throughput of the 1-persistent variation is improved.

b. CSMA/CF

This variation eliminates collisions on the transmission channel. It also overlays the collision detection/resolution period with the transmission period increasing thus the throughput. The algorithm is described in the following steps, further details can be found in [Won85].

Step 1 Sense the access channel, if it is idle, wait for a fixed interval W_1, transmit the carrier over the access channel, otherwise go to step X.

Step 2 Wait for an interval W_2 and check if the carrier is the only one on the access channel. If not, wait for an interval W_3, withdraw the carrier and go to step X.

Step 3 Wait until the current transmission is over and start transmitting the message, withdraw the carrier and exit.

Step X Depends on nonpersistent or persistent variations.

Steps 1 and 2 are for collision avoidance and step X is similar to that in CSMA/CD. We can see a clear distinction between this protocol and the CSMA/CD one. In CSMA/CF, the collision avoidance period is different from the transmission period while in CSMA/CD the detection period is overlapped with the transmission period. Figure 1.3.2.1 illustrates the CSMA/CF protocol. In case a) of this figure, station n rechecks the access channel at the time $t_n+a+W_1+W_2$ (a is the end to end propagation delay) and finds out that station 0 already withdrew its carrier thus winning the contention. On the other hand, in case b) of the figure, station n can not detect that station 0 withdrew its carrier and proceeds to withdraw its own carrier.

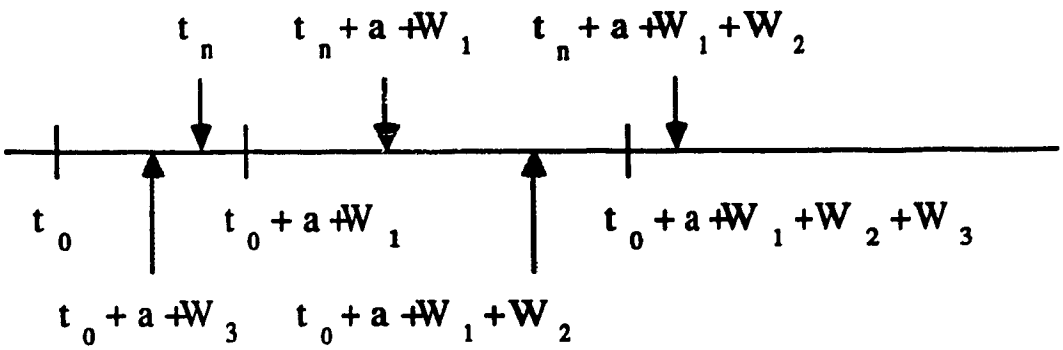

a) Successful Contention

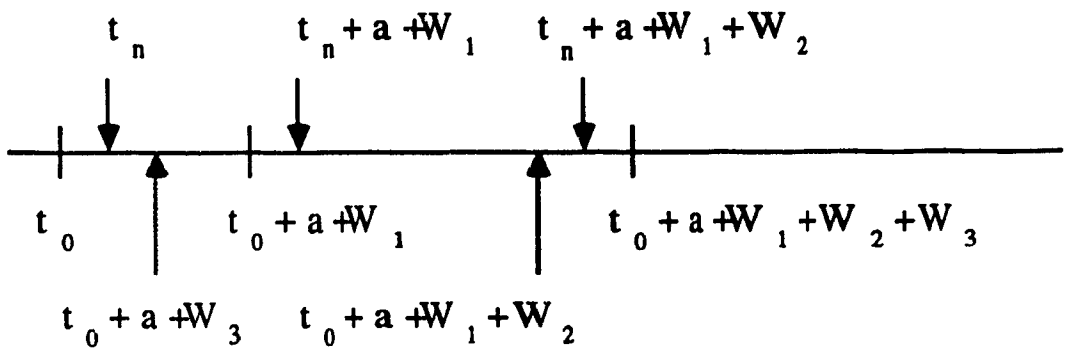

b) Unsuccessful Contention

Figure 1.3.2.1 CSMA/CF Protocol

If two different channels are used for collision avoidance and busy indication, this protocol can be implemented in a prescheduled way (i.e. collision avoidance can be performed during the current transmission) and throughput can be further improved. The original CSMA/CF protocol described in [Won85] is prescheduled. It employs a data channel to transmit data, a busy channel to indicate the state of the data channel (busy or idle) and an access channel to avoid collision. When a station wants to transmit, it checks the access channel. If the access channel is busy, it waits until the access channel becomes free. When the access channel is free, it releases a carrier on the access channel W_1 seconds later and rechecks the channel after W_2 seconds. If its carrier is the only one on the channel, it waits until the data channel becomes free (by checking the busy channel) and

proceeds to transmit. At the same time it sets the busy channel to busy and releases the access channel for subsequent contention. When the transmission is over, it releases the busy channel. On the other hand, if there is more than one carrier on the access channel, it withdraws its carrier after W_3 seconds and reschedules itself at sometime later.

Let a be the end to end propagation delay and t_0 is the time of the first arrival. Any station that arrives in the interval $[t_0, t_0+W_1]$ will sense the channel idle and participates in the contention. Obviously, the condition that the first arrival wins the contention is that no other station arrives in this interval. Let t_n, t_{n-1} be the last and the last but one arrival (if any) in that interval, the condition that the last arrival wins the contention is $t_n-t_{n-1} \geq a+W_1$ [Won85].

In Wong's work, throughput and delay of this protocol are characterized. However, Wong's work are based on certain assumptions such as that traffic generated is uniformly distributed over a cycle time T. This make it hard to compare Wong's results with Tobagi's [Tog80], and Takagi's [Tak87] results on CSMA/CD studies which are based on Poisson traffic. Also, from the comparison, it is not clear that the superiority which CSMA/CF possesses over CSMA/CD is achieved by pre-scheduling or by a more effective access mechanism.

Since CSMA/CD was first studied in Tobagi's work [Tob80], the persistent variation has not been analyzed until recently. In Tobagi or Meditch's works [Tob80, Med80], only slotted versions are studied. Takagi and Kleinrock studied the persistent CSMA variations in 1985 [Tak85]. Unfortunately, these results for persistent CSMA/CD are not accurate. Finally, new expressions for persistent CSMA/CD throughput are obtained in 1987 [Tak87. Soh87].

It is the purpose of this work to study the throughput of the CSMA/CF protocol in details and to introduce an alternative method for analyzing CSMA and prescheduling CSMA variations. In the following chapter, the throughput of 4 variations is studied and compared with its CSMA/CD counterparts. They are non-persistent, non pre-scheduling,

non-persistent with pre-scheduling, one persistent, non pre-scheduling and one-persistent, pre-scheduling CSMA/CF.

CHAPTER II
THROUGHPUT ANALYSIS

In order to carry out the analysis, some assumptions have to be made. First, we assume that all stations share the same channels and generate constant length (T) messages. These messages are assumed to come from a Poisson source with an arrival rate λ. Also, assume that there are many lightly loaded stations such that each station can hold only one message at a time. The total traffic on the channels is the result of newly created messages as well as backlogged ones. We also assume that the total traffic on the system is Poisson distributed with an average of Λ messages per second. Similar to the previous discussion we define ,a, to be the end to end propagation delay of the channels, and W_1, W_2, W_3 the waiting intervals. Let t_0 the initiating arrival of a contention and t_{n-1}, t_n the last two arrivals (if any) in the vulnerable interval $[t_0, t_0 + a + W_1]$. The condition for this contention to be successful is $t_n - t_{n-1} \geq a + W_3$ [Won85]. Let $y = t_n - t_0$, the probability distribution of y is

$$Y(t) = P[y \leq t] = P[\text{no arrival in } [\, t_0+t,\ t_0 + a + W_1 \,]]$$
$$= e^{-\Lambda(a+W_1-t)}$$

The density function of y follows

$$y(t) = \delta(t)\, e^{-\Lambda(a+W_1)} + \Lambda e^{-\Lambda(a+W_1-t)} \qquad (2.0.1)$$

The impulse function represents a nonzero probability of y=0, i.e. the case that t_0 is the last arrival in $[t_0, t_0 + a + W_1]$.

Let, P_s be the probability of success during a contention and $P_s(y)$ be the probability of success conditioned on y. We can observe that if $y = 0$, (i.e. no arrival in the vulnerable interval) the probability of success is 1. If $y < a + W_3$ the condition $t_n - t_{n-1} \geq a + W_3$ could not be satisfied, i.e. $P_s(y) = 0$, $y < a + W_3$. Otherwise, when $y \geq a + W_3$ then the probability of success is simply

$$P[\, t_n - t_{n-1} \geq a + W_3 \,] = P[\text{ no arrival in an interval having length of } a + W_3 \,] \tag{2.0.1b}$$

The probability of success of a contention can be expressed as

$$P_s(y) = \begin{cases} 0 & t_0 < t_n < t_0 + a + W_3 \\ 1 & t_n = t_0 \\ e^{-\Lambda(a+W_3)} & t_n > t_0 + a + W_3 \end{cases}$$

Then averaging over y we get the probability of success

$$P_s = e^{-\Lambda(a+W_1)} + \int_{a+W_3}^{a+W_1} e^{-\Lambda(a+W_3)} y(t)\, dt$$

$$= e^{-\Lambda(a+W_1)} + \int_{a+W_3}^{a+W_1} e^{-\Lambda(a+W_3)} \Lambda e^{-\Lambda(a+W_1-t)}\, dt$$

$$P_s = e^{-\Lambda(a+W_3)} \tag{2.0.2}$$

Note that (2.0.2) can be obtained from (2.0.1b) by assuming $t_{n-1} > t_0 + a + W_1$ if n=0.

Similar to [Hay84], the newly-generated-message rate is related with the total-message rate by the following expression.

$$\Lambda = \lambda + \Lambda (1 - P_s) \qquad (2.0.3)$$

An early observation indicates that the probability of success of this protocol is approximately that of CSMA and CSMA/CD ($e^{-\Lambda a}$ in the latter cases). The maximum probability of success can be achieved when $W_3 = 0$.

From the previous discussion, two separate channels are needed to implement the CSMA/CF protocol. One for data transmission and another for network acquisition. There is no specific requirement for the first channel as long as it can be used to transmit data. However, the second channel requires special construction which permits the channel to take three different states : idle, busy and collision. Based on the structure of two different channels, prescheduling is possible. However, a forcible model in which no prescheduling is permitted will be studied for the sake of comparison with the CSMA/CD protocol. The rest of this chapter will be devoted to the throughput analysis of four variations namely non persistent and one persistent, with and without prescheduling.

1. NONPERSISTENT CSMA/CF WITHOUT PRESCHEDULING

In this forcible model, there is an access and a data channel shared among stations. The access channel can take three different states, idle when no carrier is present, busy when only one station is present and collision when there is more than one station present. A ready station senses the access line and depending on its state, different actions will take place. If the access line is busy, the station reschedules its packet at a later time. Otherwise, it starts transmitting its carrier over the access channel after a waiting interval W_1. W_2 seconds later, it rechecks the channel for possible collision and withdraws its carrier after W_3 seconds if so. Otherwise, transmission will result on the data channel. The access channel will be released whenever the transmission finishes.

Define the busy period to be the time started by an arrival on an idle access channel until that channel becomes idle again. The state of the channel will be alternately busy (in use) or idle. Let U be the period in which the channel is used without conflict. If we denote $\overline{B}$, $\overline{I}$, $\overline{U}$ the average durations of the busy, idle and utilization period, following the renewal theory the average utilization of the channel is

$$\overline{S} = \frac{\overline{U}}{\overline{B}+\overline{I}} \qquad (2.1.1)$$

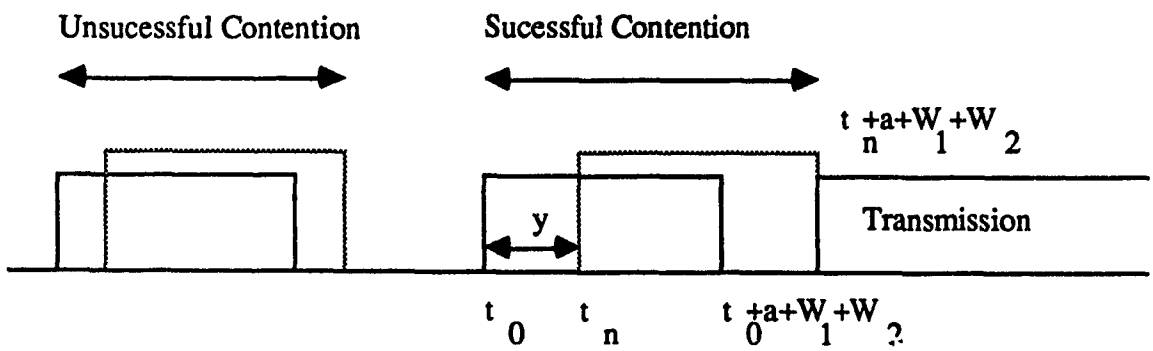

Figure 2.1.1 Nonpersistent CSMA/CF w/o prescheduling

If a busy period results in a transmission, its duration is

$$B = a + W_1 + W_2 + y + T$$

Otherwise,

$$B = a + W_1 + W_2 + W_3 + y$$

Therefore the average duration of a busy period is

$$\overline{B} = a + W_1 + W_2 + \overline{y} + P_s T + (1 - P_s) W_3 \qquad (2.1.2)$$

Since the probability of success is P_s, the average duration of U is

$$\overline{U} = P_s T = e^{-\Lambda(a+W_3)} T \tag{2.1.3}$$

The average duration of an idle period is simply $1/\Lambda$. From (2.0.1) the average value of y can be found

$$\overline{y} = \int_0^{a+W_1} t\, y(t)\, dt = a+W_1 - \frac{1}{\Lambda(1-e^{-\Lambda(a+W_1)})} \tag{2.1.4}$$

Using (2.1.1)-(2.1.4) the average utilization of the channel is

$$S = \frac{Te^{-\Lambda(a+W_3)}}{2a+2W_1+W_2-(1-e^{-\Lambda(a+W_1)})/\Lambda+W_3(1-e^{-\Lambda(a+W_3)})+Te^{-\Lambda(a+W_3)}+1/\Lambda} \tag{2.1.5}$$

The throughputs of nonpersistent CSMA and CSMA/CD are given in [Kle75] and [Vod84] as

$$S_{CSMA} = \frac{T\Lambda e^{-\Lambda a}}{\Lambda(T+2a) + e^{-\Lambda a}}$$

$$S_{CSMA/CD} = \frac{T\Lambda e^{-\Lambda a}}{T\Lambda e^{-\Lambda a} + d\Lambda(1-e^{-\Lambda a}) + (e^{-\Lambda a}+a\Lambda)}$$

where T is the transmission time, a is the propagation delay and d is the detection interval.

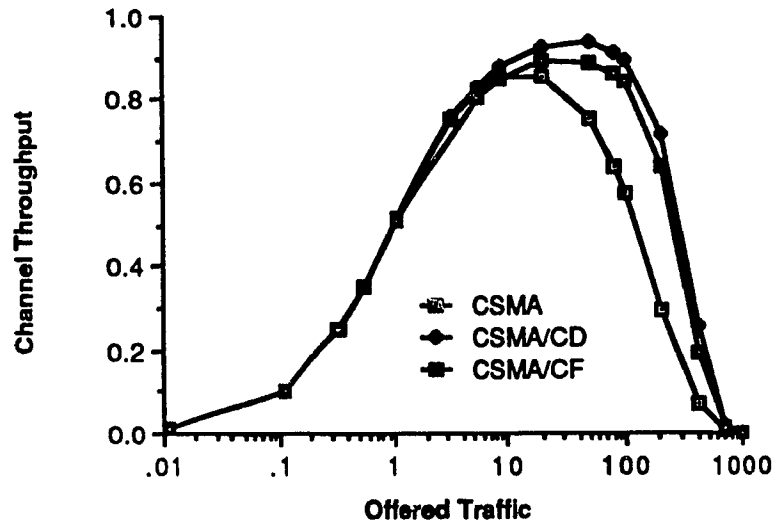

a=0.01, W_1 =0.01, W_2 =0.03, W_3 =0, T=1, d=0.04

Figure 2.1.2 Throughput comparison : CSMA/CF, CSMA, and CSMA/CD

Figure 2.1.2 shows the throughput of CSMA/CF against CSMA/CD and CSMA. From this comparison, throughput of nonpersistent CSMA/CF is better than that of CSMA but not as good as that of CSMA/CD. In general, nonpersistent CSMA/CF without prescheduling can be viewed as nonpersistent CSMA/CD with a detection interval $d = W_1 + W_2$. Therefore, its performance should be close to that of CSMA/CD with equivalent parameters. However, in CSMA/CD, the detection interval is completely overlapped with the transmission interval while in CSMA/CF, the detection interval is the overhead. The separate detection interval in CSMA/CF will allow prescheduling if two separate channels are available. If CSMA/CD is implemented in a prescheduling way, the detection interval must be separate which also results in an overhead.

In the next section, analysis will show that prescheduling improves significantly the throughput of CSMA/CF.

2. NONPERSISTENT CSMA/CF WITH PRESCHEDULING

Different from the nonprescheduling one, in this case, two separate channels are employed for data transmission and network acquisition. Also, a busy channel is used to reflect the state of the data channel, busy or not. A ready station will sense the access channel whenever it wants to transmit its packet. If the access channel is busy, the packet is rescheduled at a later time. Otherwise, the ready station starts transmitting its carrier over the channel after a waiting interval W_1 and waits for W_2 seconds before rechecking the access channel. At that time, if there is collision, it withdraws its carrier after W_3 seconds. If there is no collision, it waits until the current transmission (if any) is over by checking the busy channel, and then starts transmitting its packet over the transmission channel. At the same time the access channel is released for subsequent contention and the busy channel is set to indicate that the data channel is in use.

On the access channel, we define C_1 as the contention period started by an arrival on an idle access channel and terminated by the start of a transmission on the data channel. Also, define B_a as the busy period on the access channel started by an arrival on idle access and data channels (i.e. both access and data channels are idle at that time of arrival) and terminated by a transmission during which no arrival occurs. Figure 2.2.1 shows the relation between busy and contention periods.

Let us derive the probability density function (pdf) of the contention period on the access line. Figure 2.2.2 shows the anatomy of a contention period on the access line. It consists of several unsuccessful contentions, each followed by an idle period and terminated by a successful contention.

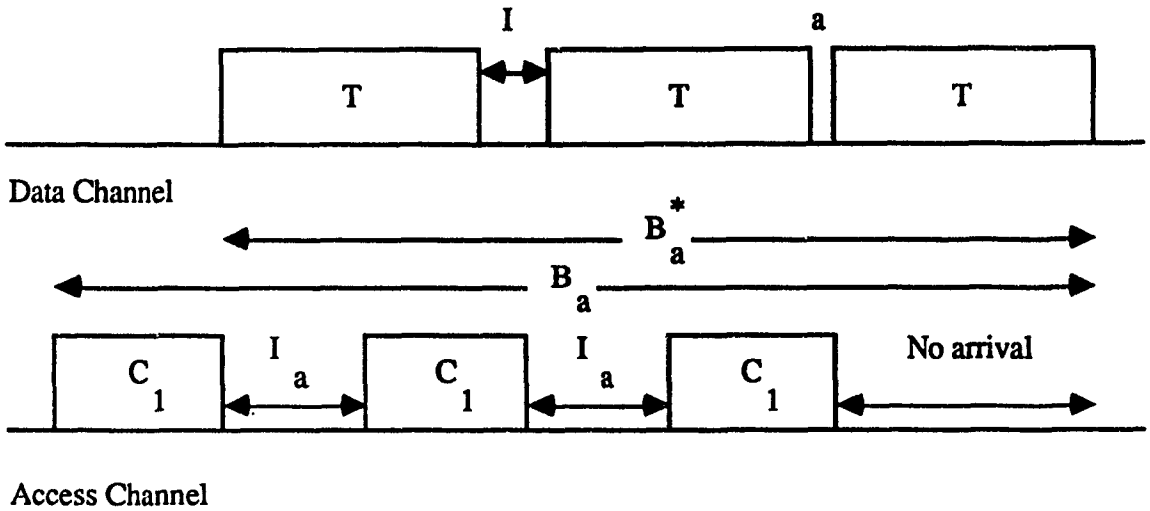

I_a : Idle Period on the Access Channel
I : Idle Period on the Data Channel
B_a: Busy Period on the Access Channel
C_1 : Contention
T : Transmisson
B_a^* : Sub-busy Period§

Figure 2.2.1 Nonpersistent CSMA/CF with prescheduling

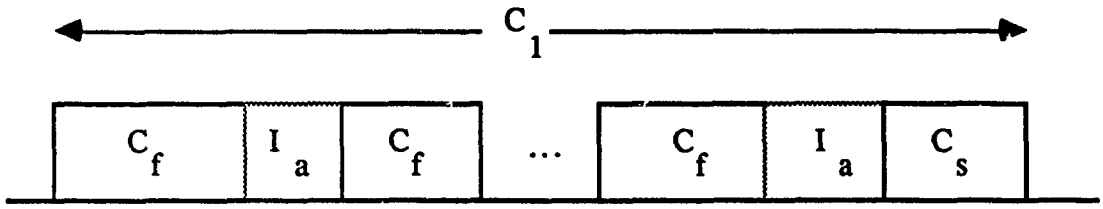

C_1 : Contention Period

I_a : Idle Period on the Access Channel

C_f : Unsuccessful Contention Segment

C_s : Successful Contention Segment

Figure 2.2.2 Contention Period

§ Defined later in the text

If only one contention results in a transmission we can write

$$C_1 = (a + W_1 + W_2 + y)$$

where y is the interval between the first and the last arrivals during the contention as defined earlier, otherwise

$$C_1 = (a + W_1 + W_2 + W_3 + y) + I_a + C_1^*$$

where C_1^* is a subbusy period having the same distribution as C_1.

Combining the two cases, noting that the probability of the first and second case is P_s and $(1-P_s)$ respectively we have

$$C_1 = \begin{cases} a+W_1+W_2+y & \text{with prob. } P_s \\ a+W_1+W_2+y+I_a+C_1^*+W_3 & \text{with prob. } 1-P_s \end{cases}$$

Let $C_1(s)$ be the Laplace transform of the density function of C_1, we have

$$C_1(s) = e^{-s(a+W_1+W_2)}\, y(s)\, [\, P_s + (1-P_s)\, I_a(s)\, C_1(s)\, e^{-sW_3}]$$

where y(s) is the Laplace transform of the density function of the random variable y introduced earlier.

With simple manipulations, we get

$$C_1(s) = \frac{e^{-s(a+W_1+W_2)} y(s) P_s}{1-e^{-s(a+W_1+W_2+W_3)} y(s)(1-P_s) I_a(s)} \qquad (2.2.0)$$

From (2.0.1), the Laplace transform of the density function of y is

$$y(s) = e^{-\Lambda(a+W_1)} + \frac{\Lambda(e^{-\Lambda(a+W_1)} - e^{-s(a+W_1)})}{\Lambda - s}$$

From the Poisson assumption, the Laplace transform of the density function of the idle duration I_a is

$$I_a(s) = \frac{\Lambda}{s+\Lambda}$$

Now, having $C_1(s)$ the Laplace transform of the density function of the busy period can be derived. In order to write a renewal expression for the busy period we have

$$B_a = C_1 + B_a^* \qquad (2.2.1)$$

where B_a^* is the busy period excluding the first contention period (see figure 2.2.1). When there is no arrival during the transmission, $B_a^* = T$.

In the case that there are arrivals during the transmission we can write

$$B_a^* = \begin{cases} T+B_a^* & I_a^*+C_1 \le T \\ I_a^*+C_1+B_a^* & \text{otherwise} \end{cases}$$

where I_a^* is the idle period conditioned on the fact that there are arrivals during transmission. The first case in the above expression corresponds to the situation where a quick resolution of the contention is possible and therefore transmissions occur one after the other on the transmission channel. The second case arises when the contention exceeds the transmission period and the transmission channel is idling.

Combining these expressions together and taking the expected values we can write

$$\overline{B}_a^* = q_{0T}T+(1-q_{0T})\left\{P[I_a^*+C_1 \le T]T+P[I_a^*+C_1 > T](\overline{I}_a^*+\overline{C}_1^*)+\overline{B}_a^*\right\}$$

where q_{0T} is the probability of no arrivals during transmission time T.

$$q_{0T} = e^{-\Lambda T}$$

with simple regrouping of terms we get

$$\overline{B}_a^* = T + \frac{1-q_{0T}}{q_{0T}} \left\{ P[I_a^* + C_1 \le T]\, T + P[I_a^* + C_1 > T]\, (\overline{I}_a^* + \overline{C}_1^*) \right\} \quad (2.2.2)$$

where $\overline{C}_1^*$ is the expected values of C_1 conditioned on $I_a^* + C_1 > T$. In order to calculate $P[I_a^* + C_1 \le T]$ the density function of C_1 is needed. However, that information is not available and all we have is the Laplace transform of its density function (equation 2.2.0). One can approximate this density function using the Central Limit theorem with the mean and variance obtained from $C_1(s)$ by taking the first and second order derivative at $s = 0$.

In this work we will try to evaluate the probability $P[I_a^* + C_1 \le T]$ directly from the Laplace transforms. First, we have to find the Laplace transform of the density function of I_a^*. Starting with the density function

$$I_a^*(t) = \frac{\Lambda e^{-\Lambda t}}{1 - e^{-\Lambda T}} \qquad 0 < t \le T$$

we get

$$I_a^*(s) = \frac{\Lambda[1 - e^{-(\Lambda+s)T}]}{(\Lambda+s)(1 - e^{-\Lambda T})}$$

Then, using the integration property of the Laplace transform we get

$$P[I_a^* + C_1 \le T] = \mathcal{L}^{-1}\{ I_a^*(s)\, C_1(s)/s \} \Big|_{t=T}$$

where $\mathcal{L}^{-1}$ denotes the inverse Laplace transform.

And the other term of equation (2.2.2) can be found as

$$P[I_a^*+C_1>T]\,(\bar{I}_a^* + \bar{C}_1^*) = \int_T^{\infty} t\, I_a^*(t) \otimes C_1(t)\, dt$$

$$= \int_0^{\infty} t\, I_a^*(t) \otimes C_1(t)\, dt - \int_0^{T} t\, I_a^*(t) \otimes C_1(t)\, dt$$

where $\otimes$ stands for convolution in the time domain

$$= \bar{I}_a^* + \bar{C}_1 - \mathcal{L}^{-1}\left\{ -\frac{1}{s}\frac{d}{ds}[\, I_a^*(s)\, C_1(s)\,]\right\}\Big|_{t=T}$$

using the property

$$\mathcal{L}\left\{ t\, f(t)\right\} = -F'(s)$$

where $F'(s)$ denote the first derivative $dF(s)/ds$. The inverse Laplace transform can be computed using such numerical methods as in [Bel66]. Using the properties of the characteristic function, $\bar{C}_1$ can be found from $C_1(s)$.

$$\bar{C}_1 = -\frac{dC_1(s)}{ds}\Big|_{s=0}$$

$$= \frac{a+W_1+W_2+\bar{y}+(1-P_s)(W_3+\bar{I}_a)}{P_s}$$

$$= \frac{2a+2W_1+W_2+1/\Lambda\,(1-e^{-\Lambda(a+W_1)})+e^{-\Lambda(a+W_3)}(W_3+1/\Lambda)}{e^{-\Lambda(a+W_3)}} \qquad (2.2.3)$$

The average value of I_a^* is simply

$$\bar{I}_a^* = \int_0^T \frac{t\,\Lambda\, e^{-\Lambda t}}{1-e^{-\Lambda t}}dt = \frac{1/\Lambda\,(1-e^{-\Lambda T}) - Te^{-\Lambda T}}{1-e^{-\Lambda T}} \qquad (2.2.4)$$

From (2.2.1) the average busy period is $\bar{B}_a = \bar{C}_1 + \bar{B}_a^*$

A recursive expression for the utilization period can be written

$$\overline{U} = T + (1 - q_{0T})\,\overline{U}$$

or

$$\overline{U} = \frac{T}{q_{0T}} \qquad (2.2.5)$$

Using equations (2.2.1)-(2.2.5) the throughput can be computed as

$$\overline{S} = \frac{\overline{U}}{\overline{B}_a + \overline{I}_a}$$

The result is shown in figure 2.2.3. The throughput of prescheduling CSMA/CF is better than that of CSMA/CD as well as CSMA.

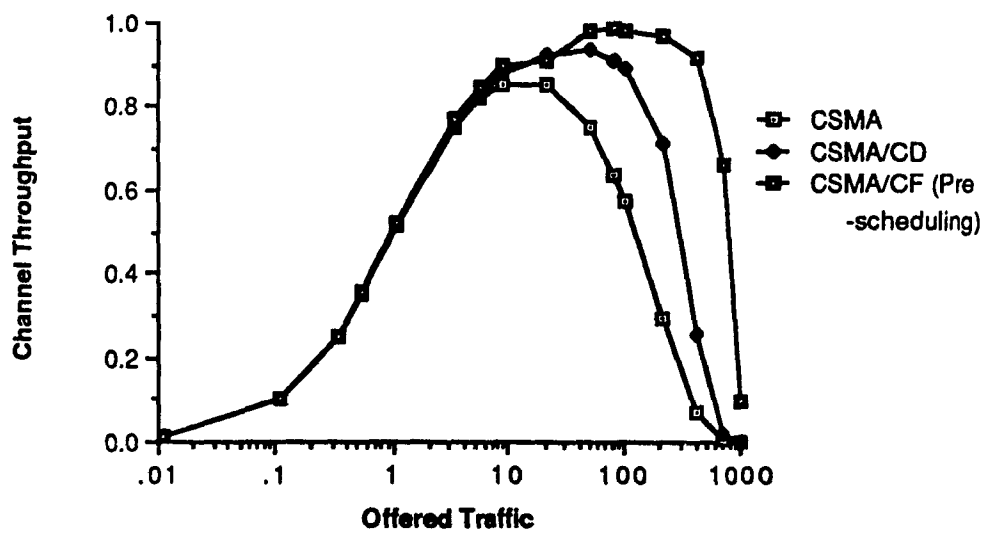

a=0.01, W_1 =0.01, W_2 =0.03, W_3 =0, d=0.04

Figure 2.2.3 Throughput of prescheduling CSMA/CF v.s. CSMA, CSMA/CD

3. ONE-PERSISTENT CSMA/CF WITHOUT PRESCHEDULING

In general, the probability that a contention to be successful in CSMA/CF is $e^{-\Lambda(a+W_3)}$. When $W_3=0$ this probability will be the same as in CSMA/CD, $e^{-\Lambda a}$. Therefore, without prescheduling, this protocol does not offer any advantage over the classical nonpersistent CSMA/CD. However, this is not the case in 1-persistent CSMA/CF. In this variation, when the access channel is busy, arriving stations will persist on sensing and proceed in the usual way when the channel is released. In 1-persistent CSMA/CD this situation results in a degradation of throughput. If there is more than one message accumulated at the end of a transmission period, these stations will attempt to acquire the channel at once and the probability of collision is 1. On the other hand, the CSMA/CF allows other stations to take over the channel when this situation happens. Consider a contention started by more than one station attempting transmission (access) at the same time (these stations are accumulated from the previous transmission/contention period). This situation does not exist in the nonpersistent case due to the Poisson arrival assumption. In the previous discussion, the last arrival in a vulnerable interval of a contention period will get the mastery of the network if its arrival time satisfies

$$t_{n-1} + a + W_3 \leq t_n \leq t_0 + a + W_1$$

Therefore, the probability of success in this case P_2 is

$$P_2(y) = \begin{cases} 0 & y = t_n - t_0 < a + W_3 \\ e^{-\Lambda(a+W_3)} & \text{otherwise} \end{cases}$$

Averaging over y we get

$$P_2 = \int_{a+W_1}^{a+W_3} e^{-\Lambda(a+W_3)} y(t)\, dt$$

$$= \int_{a+W_1}^{a+W_3} e^{-\Lambda(a+W_3)} \Lambda e^{-\Lambda(a+W_1-t)}\, dt$$

$$= e^{-\Lambda(a+W_3)} - e^{-\Lambda(a+W_1)} \qquad (2.3.1)$$

In order to apply the results of the renewal theory, we need to compute the expected value of the busy period. Similar to the nonpersistent CSMA/CF without prescheduling, a data channel and an access channel are shared between stations. The data channel serves to transmit data and the access channel serves to detect collisions. The busy period in this case is defined as the period initiated by a station's attempt on an idle channel and terminated by a transmission (or an unsuccessful contention) which leaves the system empty. The state of the channel will be alternating between busy and idle periods. A busy period followed by an idle period constitutes a cycle. Figure 2.3.1 shows the busy and idle periods in one-persistent CSMA/CF without prescheduling.

The analysis of this section employs a variation of the technique used in the analysis of M/G/1 queueing systems [Hay84, Kle75]. Consider a contention starting at time 0. Any station arriving during the vulnerable interval $[0, a+W_1]$ will participate in the competition. Provided that this contention is successful, the competition will be over at time $a+W_1+W_2+y$ where y is the relative arrival time of the last station as defined earlier. The transmission period is $[a+W_1+W_2+y,\ a+W_1+W_2+y+T]$. All the arrivals in the interval $R_s = [a+W_1,\ a+W_1+W_2+y+T]$ will sense the channel busy and accumulate until the end of transmission. At that time these stations will attempt to acquire the network at once. Depending on the number of stations accumulated in the interval $[a+W_1,\ a+W_1+W_2+y+T]$ the busy period will take different forms.

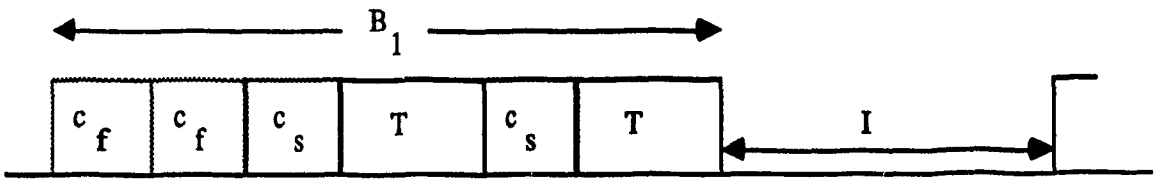

(a) Busy Period terminated by a transmission with no packet accumulated

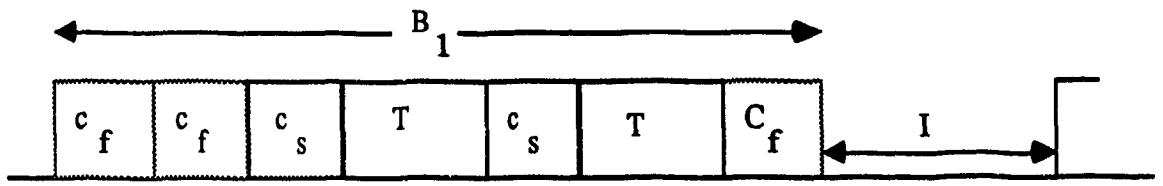

(b) Busy Period terminated by an unsucessful contention with no packet accumulated

c_s : Successful Contention c_f : Unsuccessful Contention

T : Transmission I : Idle Period

Figure 2.3.1 Busy and Idle periods in 1-persistent CSMA/CF.

Let B_1 be the duration of a busy period. If there is no packet accumulated at the end of R_s, the busy period is simply the sum of the contention and the transmission.

$$B_1 = a + W_1 + W_2 + y + T$$

Then, if only one message arrives in R_s the busy period is the sum of the contention with the transmission time and the subbusy period generated by that message. This subbusy period will have the same distribution as B_1 itself. Let B_1^* be the duration of the subbusy period. We have

$$B_1 = a + W_1 + W_2 + y + T + B_1^*$$

In the case that more than one message arrives in R_s the subbusy period will take another form of distribution. Let B_2 be the subbusy period generated by more than one message accumulated at the end of the previous transmission; we can write

$$B_1 = a + W_1 + W_2 + y + T + B_2$$

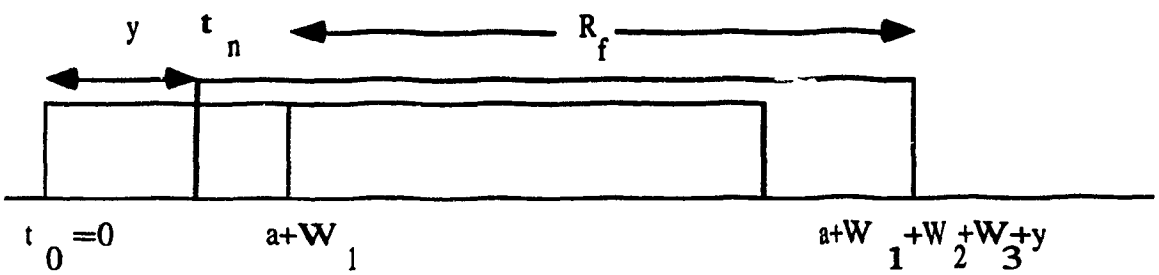

(a) Unsuccessful Contention

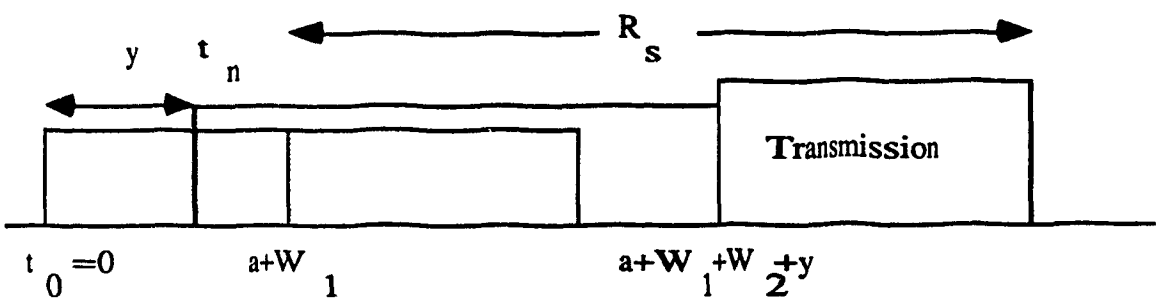

(b) Successful Contention

Figure 2.3.2 Successful and unsuccessful contentions

Alternatively, assuming that this contention is unsuccessful, the competition will be over at the time $a+W_1+W_2+y+W_3$ where y is the relative arrival time of the last station as defined earlier. There is no transmission following an unsuccessful contention. All the arrivals in the interval $R_f = [a+W_1, a+W_1+W_2+W_3+y]$ will sense the channel busy and accumulate until the contention is over. At that time these stations will attempt to acquire to network at once. Again, depending on the number of stations accumulated in the interval R_f

the busy period will take different forms. If no packets were accumulated at the end of R_f, the busy period is simply the contention.

$$B_1 = a + W_1 + W_2 + y + W_3$$

If only one message arrived in R_f the busy period is the sum of the contention with the subbusy period generated by that message. This subbusy period B_1^* will have the same distribution as B_1.

$$B_1 = a + W_1 + W_2 + y + W_3 + B_1^*$$

Now, when more than one message arrives in R_f the subbusy period generated by theses messages will take the same distribution as B_2 defined earlier.

$$B_1 = a + W_1 + W_2 + y + W_3 + B_2$$

The probability of success is a function of the last arrival y, namely

$$P_s(y) = \begin{cases} 1 & y = 0 \\ 0 & 0 < y < a+W_3 \\ e^{-\Lambda(a+W_3)} & a+W_3 \le y \le a+W_1 \end{cases}$$

Define the following terms

q_{0st} : Probability that no message arrives in $[a+W_1,\ a+W_1+W_2+y+T]$

q_{1st} : Probability that only 1 message arrives in $[a+W_1,\ a+W_1+W_2+y+T]$

q_{0f} : Probability that no message arrives in $[a+W_1,\ a+W_1+W_2+W_3+y]$

q_{1f} : Probability that only 1 message arrives in $[a+W_1,\ a+W_1+W_2+W_3+y]$.

Conditioning on y, we can write the expected duration of a busy period in the following manner

$$\overline{B}_1 = a + W_1 + W_2 + y + P_s(y)\left[T + q_{1st}(y)\overline{B}_1 + (1 - q_{0st}(y) - q_{1st}(y))\overline{B}_2\right]$$
$$+ P_f(y)\left[W_3 + q_{1f}(y)\overline{B}_1 + (1 - q_{0f}(y) - q_{1f}(y))\overline{B}_2\right] \qquad (2.3.2)$$

where $P_f(y) = 1 - P_s(y)$ is the probability of failing in a contention and f(y) indicates a dependency on y.

Our attention turns now to the expected duration of B_2, the subbusy period initiated by more than one station at the same time. An expression similar to (2.3.2) can be derived for $\overline{B}_2$ with exceptions. Note that since more than one station initiates the contention, when $y = 0$ (i.e. no other stations arrive in the vulnerable interval) the probability of success is 0. Therefore, the probability of success in a contention initiated by more than one station (P_2 defined in equation (2.3.1)) will take the place of P_s in (2.3.2) to form

$$\overline{B}_2 = a + W_1 + W_2 + y + P_2(y)\left[T + q_{1st}(y)\overline{B}_1 + (1 - q_{0st}(y) - q_{1st}(y))\overline{B}_2\right]$$
$$+ P_f^*(y)\left[W_3 + q_{1f}(y)\overline{B}_1 + (1 - q_{0f}(y) - q_{1f}(y))\overline{B}_2\right] \qquad (2.3.3)$$

where $P_f^*(y) = 1 - P_2(y)$. Average (2.3.2) and (2.3.3) over y we get expressions for the expected duration of the busy period.

$$\overline{B}_1 = a + W_1 + W_2 + \overline{y} + P_s T + P_s q_{1st}\overline{B}_1 + (P_s - P_s q_{0st} - P_s q_{1st})\overline{B}_2$$
$$+ P_f W_3 + P_f q_{1f}\overline{B}_1 + (P_f - P_f q_{0f} - P_f q_{1f})\overline{B}_2 \qquad (2.3.4)$$

$$\overline{B}_2 = a + W_1 + W_2 + \overline{y} + P_2 T + P_2 q_{1st}\overline{B}_1 + (P_2 - P_2 q_{0st} - P_2 q_{1st})\overline{B}_2$$
$$+ P_f^* W_3 + P_f^* q_{1f}\overline{B}_1 + (P_f^* - P_f^* q_{0f} - P_f^* q_{1f})\overline{B}_2 \qquad (2.3.5)$$

Simple substitution of (2.3.5) into (2.3.4) will give the required expected duration of the busy period. There are a few parameters in these expressions which we have to compute.

First, $P_s q_{0st}$ is

$$P_s q_{0st} = P[y=0]\, P[\text{no arrival in } R_s / y=0]$$

$$+ \int_{a+W_3}^{a+W_1} e^{-\Lambda(a+W_3)} \Lambda e^{-\Lambda(a+W_1-t)} P[\text{no arrival in } R_s / y=t]\, dt$$

$$= e^{-\Lambda(a+W_1)} e^{-\Lambda(W_2+T)} + \int_{a+W_3}^{a+W_1} e^{-\Lambda(a+W_3)} \Lambda e^{-\Lambda(a+W_1-t)} e^{-\Lambda(T+W_2+t)}\, dt$$

$$= e^{-\Lambda(a+W_1)} e^{-\Lambda(W_2+T)} + \Lambda(W_1 - W_3) e^{-\Lambda(2a+W_1+W_2+W_3+T)} \qquad (2.3.6)$$

Similarly,

$$P_s q_{1st} = e^{-\Lambda(a+W_1)} \Lambda\,(W_2 + T)\, e^{-\Lambda(W_2+T)}$$

$$+ \int_{a+W_3}^{a+W_1} e^{-\Lambda(a+W_3)} \Lambda e^{-\Lambda(a+W_1-t)} -\Lambda(T+W_2+t)\, e^{-\Lambda(T+W_2+t)}\, dt$$

$$= e^{-\Lambda(a+W_1)} \Lambda(W_2 + T) e^{-\Lambda(W_2+T)}$$

$$+ \Lambda^2 (W_2 + T)(W_1 - W_3) e^{-\Lambda(2a+W_1+W_2+W_3+T)}$$

$$+ \Lambda^2 \left\{ \frac{(a+W_1)^2 - (a+W_3)^2}{2} \right\} e^{-\Lambda(2a+W_1+W_2+W_3+T)}$$

$$= e^{-\Lambda(a+W_1+W_2+T)} \Lambda\,(W_2 + T)$$

$$+ \Lambda^2 e^{-\Lambda(2a+W_1+W_2+W_3+T)} \left\{ (W_2 + T)(W_1 - W_3) \right.$$

$$+\frac{(W_1 - W_3)}{}\frac{(2a + W_1 + W_3)}{2}\Big\} \qquad (2.3.7)$$

On the contrary, $P_f = 1 - P_s$,

$$P_f(y) = \begin{cases} 0 & y = 0 \\ 1 & y < a+W_3 \\ 1-e^{-\Lambda(a+W_3)} & y \geq a+W_3 \end{cases}$$

The probability that there is no arrival during $[a+W_1,\ a+W_1+W_2+W_3+y]$ is

$$P_f q_{0f} = \int_0^{a+W_1} \Lambda e^{-\Lambda(a+W_1-t)} e^{-\Lambda(W_2+W_3+t)} dt$$

$$+ (1 - e^{-\Lambda(a+W_3)}) \int_{a+W_2}^{a+W_1} \Lambda e^{-\Lambda(a+W_1-t)} e^{-\Lambda(W_2+W_3+t)} dt$$

$$= \Lambda(a+W_3) e^{-\Lambda(a+W_1+W_2+W_3)}$$

$$+ (1 - e^{-\Lambda(a+W_1)}) \Lambda(W_1 - W_3) e^{-\Lambda(a+W_1+W_2+W_3)}$$

$$= e^{-\Lambda(a+W_1+W_2+W_3)} \left\{ \Lambda(a+W_3) + (1 - e^{-\Lambda(a+W_3)}) \Lambda(W_1 - W_3) \right\}$$

$$= e^{-\Lambda(a+W_1+W_2+W_3)} \Lambda \left\{ a + W_1 + (W_1 - W_3) e^{-\Lambda(a+W_3)} \right\} \qquad (2.3.8)$$

and the probability of one arrival in $[a+W_1,\ a+W_1+W_2+W_3+y]$ is

$$P_f\ q_{1f} = \int_0^{a+W_1} \Lambda e^{-\Lambda(a+W_1-t)} \Lambda(W_2+W_3+t) e^{-\Lambda(W_2+W_3+t)} dt$$

$$+ (1 - e^{-\Lambda(a+W_3)}) \int_{a+W_2}^{a+W_1} \Lambda e^{-\Lambda(a+W_1-t)} \Lambda(W_2+W_3+t) e^{-\Lambda(W_2+W_3+t)} dt$$

$$= \Lambda^2 \left\{ (a+W_3)(W_2+W_3) + \frac{(a+W_3)^2}{2} \right\} e^{-\Lambda(a+W_1+W_2+W_3)}$$

$$+ (1 - e^{-\Lambda(a+W_3)})\, e^{-\Lambda(a+W_1+W_2+W_3)} \cdot$$

$$\Lambda^2 \left\{ (W_1 - W_3)(W_2+W_3) \right.$$

$$\left. + \frac{(a+W_1)^2 - (a+W_3)^2}{2} \right\} \qquad (2.3.9)$$

For $P_2\, q_{0st}$, by inspection, we can see that P_2 is different from P_s in only the term generated by $y = 0$. Therefore, $P_2\, q_{0st}$ is

$$P_2\, q_{0st} = \Lambda\,(W_1 - W_3)\, e^{-\Lambda(2a+W_1+W_2+W_3+T)} \qquad (2.3.10)$$

and

$$P_2\, q_{1st} = \Lambda^2\, e^{-\Lambda(2a+W_1+W_2+W_3+T)} \left\{ (W_2+T)(W_1 - W_3) \right.$$

$$\left. + \frac{(a+W_1)^2 - (a+W_3)^2}{2} \right\} \qquad (2.3.11)$$

Similarly, $P_f^*\, q_{0f}$ and $P_f^*\, q_{1f}$ can be deduced by inspection from $P_f q_{0f}$ and $P_f q_{1f}$.

$$P_f^*\, q_{0f} = e^{-\Lambda(a+W_1+W_2+W_3)} + P_f q_{0f}$$

$$= e^{-\Lambda(a+W_1+W_2+W_3)} \left\{ 1 + \Lambda\,(a+W_1) \right.$$

$$\left. + \Lambda\,(W_1 - W_3)\, e^{-\Lambda(a+W_3)} \right\} \qquad (2.3.12)$$

$$P_f^* q_{1f} = \Lambda (W_2 + W_3) e^{-\Lambda(a+W_1+W_2+W_3)} + P_f q_{1f}$$

$$= \Lambda (W_2 + W_3) e^{-\Lambda(a+W_1+W_2+W_3)}$$

$$+ \Lambda^2 \left\{ (a+W_3)(W_2+W_3) + \frac{(a+W_3)^2}{2} \right\} e^{-\Lambda(a+W_1+W_2+W_3)}$$

$$+ (1 - e^{-\Lambda(a+W_3)}) e^{-\Lambda(a+W_1+W_2+W_3)} \Lambda^2 \left\{ (W_1 - W_3)(W_2 + W_3) \right.$$

$$\left. + \frac{(a+W_1)^2 - (a+W_3)^2}{2} \right\} \qquad (2.3.13)$$

Substitute (2.3.6)-(2.3.13) into (2.3.4)-(2.3.5) and letting

$$A = P_s q_{1st} + P_f q_{1f}$$

$$B = P_s - P_s q_{0st} - P_s q_{1st} + P_f - P_f q_{0f} - P_f q_{1f}$$

$$= 1 - P_s q_{0st} + P_s q_{1st} - P_f q_{0f} + P_f q_{1f}$$

$$C = P_2 q_{1st} + P_f^* q_{1f}$$

$$D = 1 - P_2 q_{0st} - P_2 q_{1st} - P_f^* q_{0f} - P_f^* q_{1f}$$

$$E = a + W_1 + W_2 + \bar{y} + P_f W_3 + P_s T$$

$$F = a + W_1 + W_2 + \bar{y} + W_3 P_f^* + P_2 T$$

we can write

$$\overline{B}_1 = E + A \overline{B}_1 + B \overline{B}_2 \qquad (2.3.14)$$

$$\overline{B}_2 = F + C \overline{B}_1 + D \overline{B}_2 \qquad (2.3.15)$$

after some simple manipulations we get the average duration of the busy period

$$\overline{B}_1 = \frac{E(1-D) + BF}{(1-A)(1-D) - CB} \tag{2.3.16}$$

Using the same renewal method, we can compute the average duration of the utilization period. Let $\overline{U}_1$, $\overline{U}_2$ be the expected sum of the durations of the utilization period in a busy period initiated by one and more than one stations respectively, we have

$$\overline{U}_1 = P_s T + A\,\overline{U}_1 + B\,\overline{U}_2 \tag{2.3.17}$$

$$\overline{U}_2 = P_2 T + C\,\overline{U}_1 + D\,\overline{U}_2 \tag{2.3.18}$$

Note that (2.3.17) and (2.3.18) are obtained from (2.3.14) and (2.3.15) by replacing $\overline{B}_1$ with $\overline{U}_1$ and $\overline{B}_2$ with $\overline{U}_2$ since associated with a busy period type, there is a corresponding type of utilization periods. Also $P_s T$ and $P_2 T$ are expected durations of the utilization following a contention.

Substitute (2.3.18) into (2.3.17) we get the expected total duration of utilization periods in a busy period

$$\overline{U}_1 = \frac{T[P_s(1-D) + P_2 B]}{(1-A)(1-D) - BC} \tag{2.3.19}$$

The average length of the idle period is simply $I = 1/\Lambda$ and the throughput follows

$$S = \frac{\overline{U}_1}{\overline{B}_1 + 1/\Lambda}$$

The result is plotted in figure 2.3.3. As we expected, the throughput of CSMA/CF is better than the collision detection one.

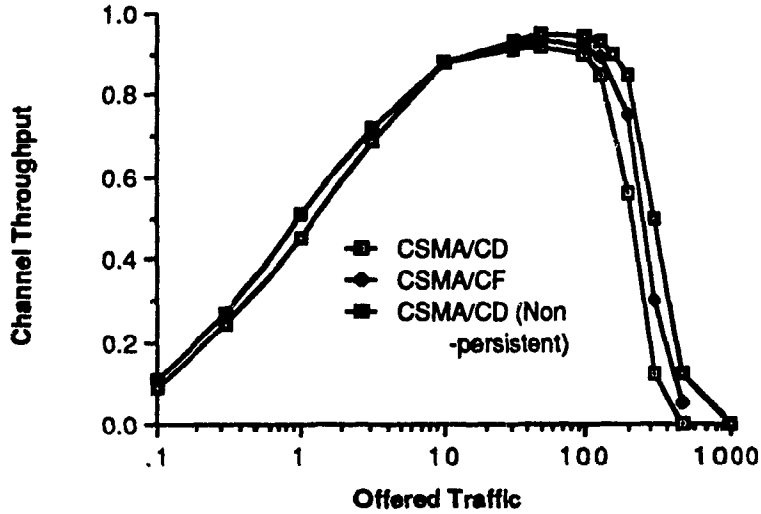

a=0.01, W_1 =0.01, W_2 =0.03, W_3 =0, T=1, d=0.04
Figure 2.3.3 Throughput of 1-persistent CSMA/CF v.s CSMA/CD

4. ONE-PERSISTENT CSMA/CF WITH PRESCHEDULING

In the previous section we saw that the throughput of one-persistent CSMA/CF is better than that of CSMA/CD with the same set of parameters. However, like most one-persistent variations, its throughput is not comparable to that of its non-persistent counterpart. The throughput analysis of one-persistent CSMA/CF with prescheduling will be presented in this section. As we shall see, its throughput is better than that of the nonpersistent CSMA/CD.

Like the nonpersistent case, two channels are shared between stations. One for data transmission and the other for network acquisition. A ready station will sense the access channel whenever it wants to transmit its packet. If the access channel is busy, the station persists on sensing it until it becomes idle. If the channel is idle, the ready station starts transmitting its carrier over the channel after a waiting interval W_1 and waits for W_2

seconds before rechecking the access channel. At that time, if there is a collision, it withdraws its carrier after W_3 seconds. If there is no collision, it waits until the current transmission (if any) is over and starts transmitting its packet over the channel. At the same time the access channel is released for subsequent contention. The transmission channel will alternate between idle and transmission periods. This idle period is a random variable which is dependent on the activities taking place on the access channel. If a station arrives on an idle access channel and the data channel is also idle, it starts a new busy period. This busy period will be terminated by a transmission with no message accumulated. The busy period starts with a contention period C_1 at the end of which, a station is selected (i.e. successful in competition against other stations).

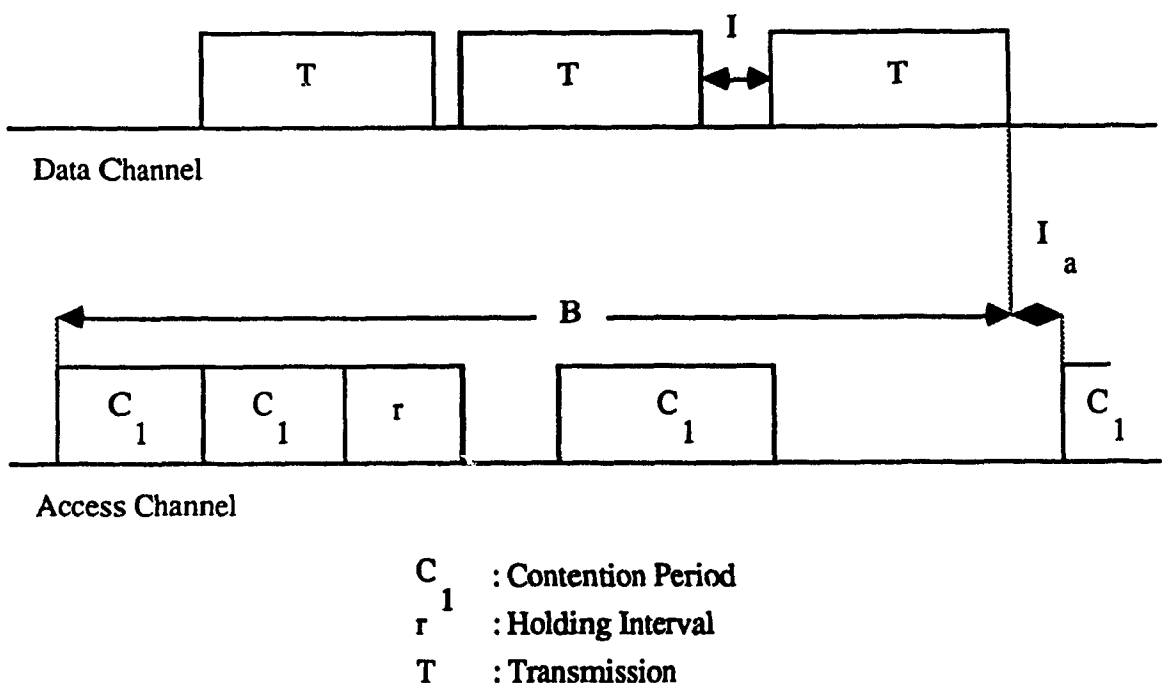

Figure 2.4.1 Busy period of 1-persistent CSMA/CF with prescheduling

This contention period consists of zero or more failing contention segments (C_f), alternating with idle segments and terminated by a successful segment. The anatomy of a contention period is shown in figure 2.4.2 and figure 2.4.1 illustrates the relation between busy and contention periods.

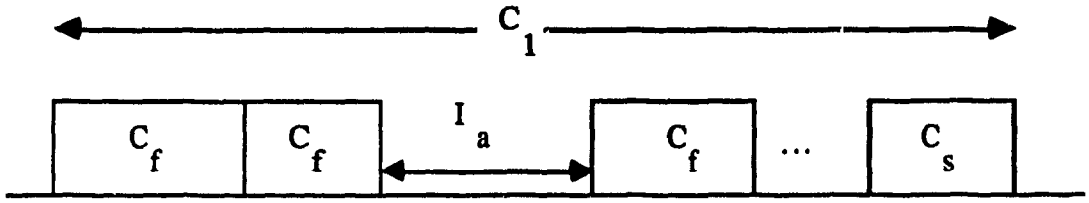

C_f : Unsuccessful Contention Segment

C_s : Successful Contention Segment

I_a : Idle Period on the Access Channel

C_1 : Contention Period

Figure 2.4.2 Contention period

Denoting by $C_1(s)$ the Laplace transform of the density function of the duration of a contention period we can write

$$C_1(s) = e^{-s(a+W_1+W_2)}\, y(s) \text{ with probability } P_s \qquad (2.4.1)$$

where y is the last arrival in the vulnerable interval as defined earlier and $e^{-s(a+W_1+W_2)}y(s)$ is the Laplace transform of the density function of the duration of a successful contention segment (C_s). The duration of a failing contention segment (C_f) is $a+W_1+W_2+W_3+y$. During the first $a + W_1$ seconds (i.e. the vulnerable interval) stations arriving will participate in the competition. For the last $W_2 + W_3 + y$ seconds of the contention segment ($I_1 = [a+W_1,\ a+W_1+W_2+W_3+y]$), stations will accumulate. If no

messages accumulate, this contention segment will be followed by an idle period and another subcontention period. The subcontention period has the same probability distribution as the contention period itself. Let q_{0f} be the probability of no arrival during l_f like in the section 2.3 we can write

$$C_1(s) = e^{-s(a+W_1+W_2+W_3)}\, y(s)\, I_a(s)\, C_1(s) \text{ with probability } P_f\, q_{0f} \quad (2.4.2)$$

where $I_a(s)$ is the Laplace transform of the probability density function of the idle period on the access line. I_a is the idle period on the access channel started when no packets were accumulated in the last contention. When exactly one message was accumulated during the last unsuccessful contention, that contention will be followed by a subcontention period with the same distribution.

$$C_1(s) = e^{-s(a+W_1+W_2+W_3)}\, y(s)\, C_1(s) \text{ with probability } P_f\, q_{1f} \quad (2.4.3)$$

In the case that more than one message accumulates, the following contention segment will have less chance of success (P_2 defined in section 2.3 instead of P_s). Let C_2 be the random duration of the subcontention period started by more than one station accumulated and $C_2(s)$ be the Laplace transform of its density function we have

$$C_1(s) = e^{-s(a+W_1+W_2+W_3)}\, y(s)\, C_2(s)$$

$$\text{with probability } P_f\,(1 - q_{0f} - q_{1f}) \quad (2.4.4)$$

Combining (2.4.1)-(2.4.4) we obtain the Laplace transform of the density function of the duration of a contention period.

$$C_1(s) = e^{-s(a+W_1+W_2)}\, y(s)\, \{P_s + P_f\, e^{-sW_3}\, [\, q_{1f}\, C_1(s) + q_{0f}\, I_a(s)\, C_1(s)$$

$$+ (1 - q_{0f} - q_{1f})\, C_2(s)]\} \quad (2.4.5)$$

The Laplace transform of the density function of the duration of the sub-contention period C_2 can be found in a similar manner

$$C_2(s) = e^{-s(a+W_1+W_2)}\, y(s) \left\{ P_2 + P_f^* e^{-sW_3} \left[q_{1f} C_1(s) + q_{0f} I_a(s) C_1(s) + (1 - q_{0f} - q_{1f}) C_2(s) \right] \right\} \tag{2.4.6}$$

The system with two equations and two unknowns (2.4.5)-(2.4.6) permits us to find $C_1(s)$ and $C_2(s)$. Letting

$$v_1(s) = -e^{-s(a+W_1+W_2+W_3)} P_f (1 - q_{0f} - q_{1f})\, y(s)$$

$$v_2(s) = 1 - e^{-s(a+W_1+W_2+W_3)} P_f^* (1 - q_{0f} - q_{1f})\, y(s)$$

$$w_1(s) = P_s e^{-s(a+W_1+W_2)} y(s)$$

$$w_2(s) = P_2 e^{-s(a+W_1+W_2)} y(s)$$

$$u_1(s) = 1 - e^{-s(a+W_1+W_2+W_3)} P_f [q_{1f} + q_{0f} I_a(s)]\, y(s)$$

$$u_2(s) = -e^{-s(a+W_1+W_2+W_3)} P_f^* [q_{1f} + q_{0f} I_a(s)]\, y(s)$$

The system of equations is simplified to

$$\begin{cases} u_1(s)C_1(s) + v_1(s)C_2(s) = w_1(s) \\ u_2(s)C_1(s) + v_2(s)C_2(s) = w_2(s) \end{cases}$$

Using Cramer's rule,

$$C_1(s) = \frac{w_1(s)v_2(s) - w_2(s)v_1(s)}{u_1(s)v_2(s) - v_2(s)u_1(s)} \quad \text{and}$$

$$C_2(s) = \frac{u_1(s)w_2(s) - u_2(s)w_1(s)}{u_1(s)v_2(s) - v_2(s)u_1(s)}$$

The numerator is

$$\begin{aligned} w_1(s)\ v_2(s) - w_2(s)\ v_1(s) &= e^{-s(a+W_1+W_2)} y(s)\, P_s \\ &\quad - e^{-s(2a+2W_1+2W_2+W_3)}\, y^2(s)\, P_s (1-P_2)\,(1-q_{0f}-q_{1f}) \\ &\quad + e^{-s(2a+2W_1+2W_2+W_3)}\, y^2(s)\,(1-q_{0f}-q_{1f}) P_2 (1-P_s) \\ &= P_s\, e^{-s(a+W_1+W_2)} y(s) \\ &\quad + e^{-s(2a+2W_1+2W_2+W_3)}\, y^2(s)\,[P_2\, P_f - P_s P_f^*]\,(1-q_{0f}-q_{1f}) \end{aligned}$$

and the denominator

$$\begin{aligned} u_1(s)\ v_2(s) - u_2(s)\ v_1(s) &= 1 - e^{-s(a+W_1+W_2+W_3)}\, P_f\,(q_{1f} + q_{0f}\, I_a(s))\, y(s) \\ &\quad - e^{-s(a+W_1+W_2+W_3)}\, P_f^*(1-q_{0f}-q_{1f})\, y(s) \end{aligned}$$

which give

$$C_1(s) = \frac{P_s e^{-s(a+W_1+W_2)} y(s) + e^{-s(2a+2W_1+2W_2+W_3)} y^2(s)\,(P_2 P_f - P_s P_f^*)(1-q_{0f}-q_{1f})}{1 - e^{-s(a+W_1+W_2+W_3)} P_f (q_{1f}+q_{0f} I_a(s)) y(s) - e^{-s(a+W_1+W_2+W_3)}\, P_f^*\,(1-q_{0f}-q_{1f}) y(s)}$$

(2.4.7)

Having the expression for the contention period, the busy period can be expressed in terms of it.

There are three different situations depending on the number of messages accumulated during the first contention of the busy period.

Case a : Exactly one message accumulated

This case is shown in figure 2.4.3

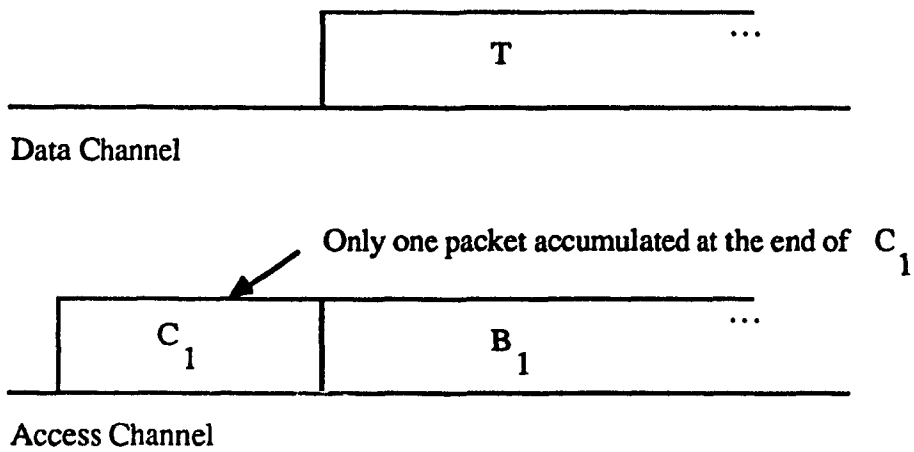

Figure 2.4.3 Case a

The first contention is followed by a subbusy period generated by that message accumulated. Since the probability of success of the first contention of this subbusy period is the same as that of the first contention of the busy period, the probability distribution of the subbusy period is the same as that of the busy period. Let B the random duration of the busy period and B_1 the random duration of the subbusy period in this case, we can write

$$B = C_1 + B_1 \text{ with probability } q_{1s} \qquad (2.4.8)$$

where q_{1s} is defined earlier as the probability that only one packet accumulated in the interval $l_s = [a+ W_1, a+ W_1 + W_2 + y]$ conditioned on that the contention is successful. There is one point that must be made clear before we go into the analysis. As seen in figure

2.4.3 the subbusy period is synchronized with the transmission on the data channel. If the transmission period finishes before the first contention period of the subbusy period B_1, and this first contention contains an idle period which begins after the transmission, the busy period shall be over at that point and a new cycle will start. Figure 2.4.4 illustrates the situation.

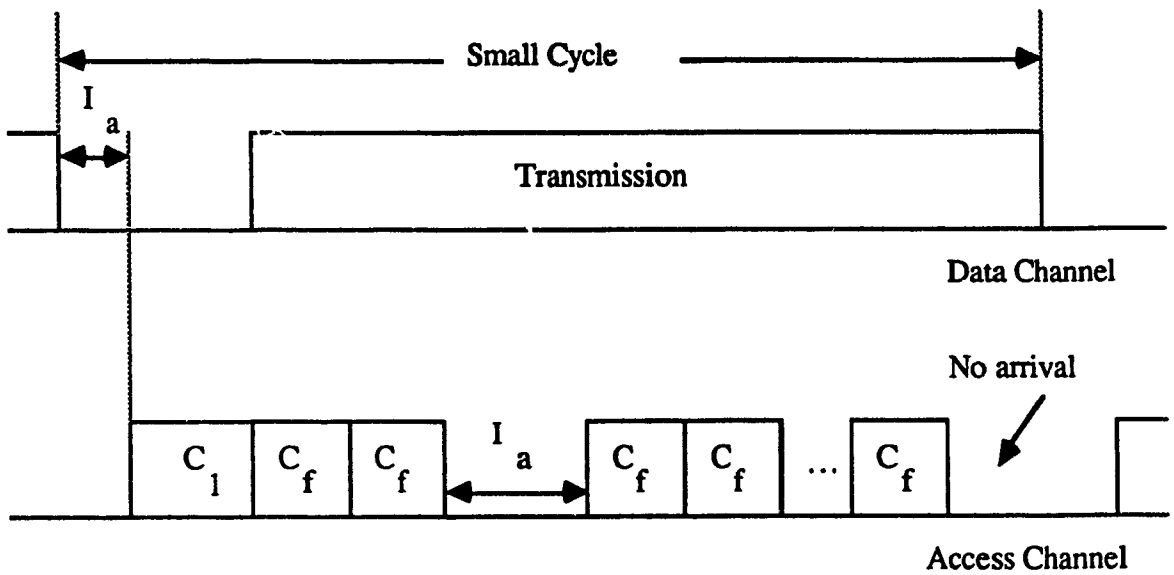

C_1 : Contention Period

C_f : Unsuccessful Contention Segment

I_a : Idle Period on the Access Channel

Figure 2.4.4 Small Cycle

This requires more complicated treatment since we have to find the distribution of a contention period which does not contain any idle interval and without any success. Therefore, the solution (which will be used in this section) suggested is that the definition

of the busy period be extended to include the idle period as long as several contention segments have been unsuccessful (Figure 2.4.5).

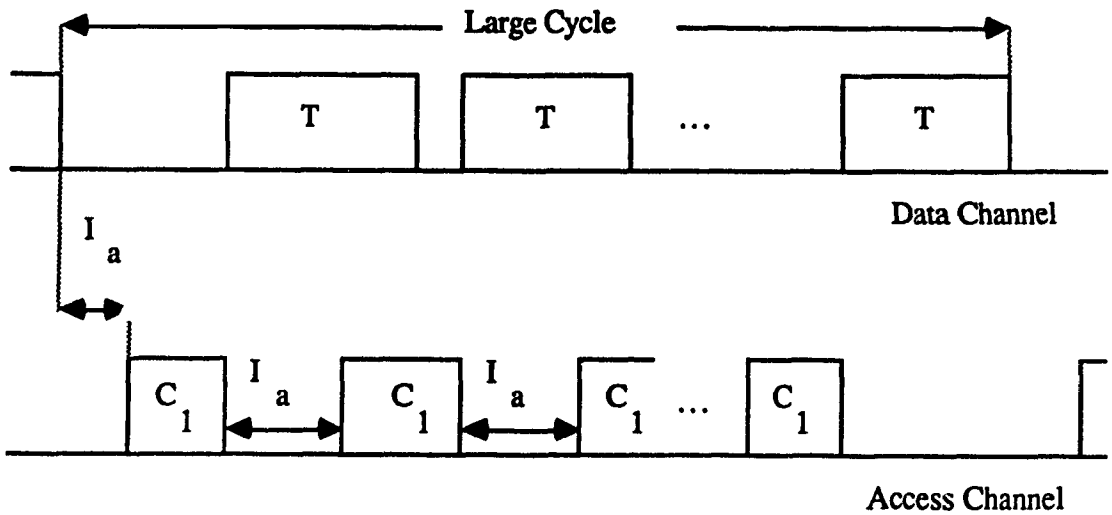

C_1 : Contention Period

I_a : Idle Period on the Access Channel

T : Transmission Period

Figure 2.4.5 Cycle used in calculation

This will not effect the calculation of the throughput since the cycle we use in this analysis is actually a multiple of the cycle defined otherwise.

Case b : More than one station accumulated

In this case, there is more than one station accumulated in the first contention, the busy period is the sum of a contention period with the subbusy period generated by the accumulated stations. This subbusy period B_2 has less chance of success (i.e. P_2) in its first contention. We can write

$$B = C_1 + B_2 \text{ with probability } 1 - q_{0s} - q_{1s} \qquad (2.4.9)$$

Case c : No station accumulated

For this case, the first contention of the busy period will be followed by an idle period. If this idle period is larger than the transmission period, the busy period is simply the sum of the contention and the transmission periods. (Figure 2.4.6 (a)). Otherwise, the busy period will be the sum of the contention period, the idle interval and the subbusy period (Figure 2.4.6 (b)). This subbusy period is initiated by one arrival (bulk arrival is not permitted) but its probability distribution is different from that of B_1 since B_1 is synchronized with the transmission.

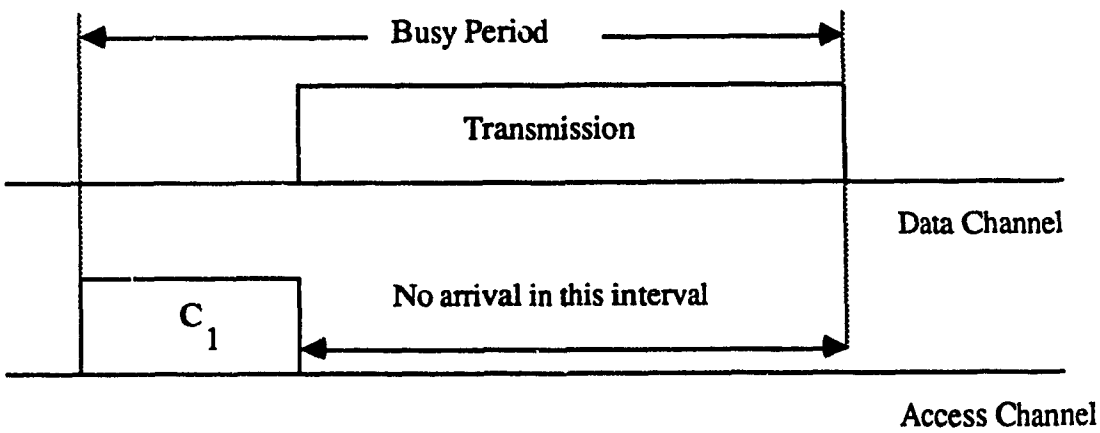

Figure 2.4.6 (a) End of cycle

Let B_0 be the random duration of the subbusy period in this case (including the idle period) we have

$$B = C_1 + B_0 \text{ with probability } q_{0s}\,(1 - q_{0T}) \qquad (2.4.10)$$

$$B = C_1 + T \text{ with probability } q_{0s}\; q_{0T} \qquad (2.4.11)$$

where q_{0T} the probability of no arrival in the transmission period.

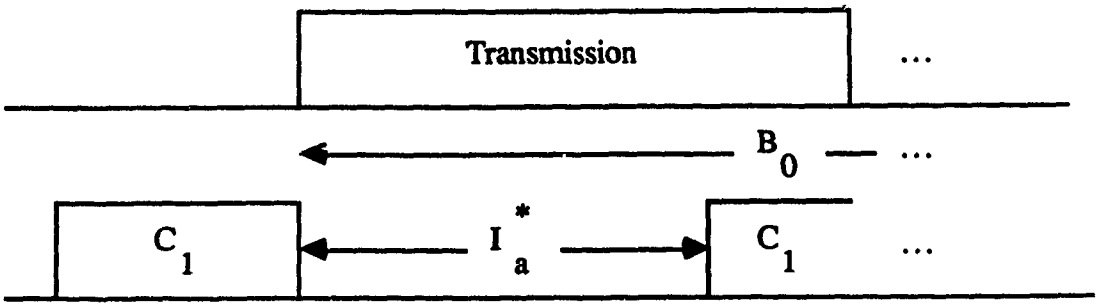

I_a^* : Idle Period given that it is shorter than the Transmission

C_1 : Contention Period

B_0 : Busy Period Starts with an Idle Period

Figure 2.4.6 (b) Continuation of cycle

Combining (2.4.8)-(2.4.11) we can express the Laplace transform of the density function of the busy period in terms of that of B_1, B_2, B_0

$$B(s) = C_1(s) \left\{ q_{1s} B_1(s) + (1- q_{0s} - q_{1s}) B_2(s) + q_{0s} q_{0T} T(s) + q_{0s} (1- q_{0T}) B_0(s) \right\}$$

Or by taking derivative of both side at s = 0, we have the expression for the expected values

$$\overline{B} = \overline{C}_1 + q_{1s} \overline{B}_1 + (1 - q_{1s} - q_{0s}) \overline{B}_2 + q_{0s} (1- q_{0T}) \overline{B}_0 + q_{0s} q_{0T} T \quad (2.4.12)$$

The expected values of B_1, B_2, B_0 will be discussed in the following sections

2.4.1 The subbusy period generated by one message accumulated

The duration of the subbusy period does not only depend on the contention on the access channel but also on the transmission on the data channel. If the contention on the access channel is larger than the transmission period (of the previous message), the subbusy period will be the sum of the contention and the sub-subbusy period whose probability distribution is dependent on the number of messages accumulated

$$B_1(s) = C_1^*(s) \{ q_{1s} B_1(s) + (1 - q_{0s} - q_{1s}) B_2(s) + q_{0s} (1 - q_{0T}) B_0(s) + q_{0s} q_{0T} T(s) \} \qquad (2.4.1.1)$$

where C_1^* is the contention period, given that it is longer than the transmission time. On the other hand, if the contention period is less than the transmission period, the contention must be extended (i.e. although a station has been selected for the next transmission period, the access must be held back until the current transmission finishes). Let r the random duration of this holding period, the number of messages accumulated will consist of the number of messages arriving in the interval l_s of the last contention segment of the contention period and the number of messages arriving in r (Figure 2.4.7).

Let q_{0w}^* be the probability that no message was accumulated, q_{1w}^* the probability that only one message was accumulated given that the holding period exists, we can write

$$B_1(s) = T(s) [q_{1w}^* B_1(s) + (1 - q_{0w}^* - q_{1w}^*) B_2(s) + q_{0w}^* (1 - q_{0T}) B_0(s) + q_{0w}^* q_{0T} T(s)] \qquad (2.4.1.2)$$

Combining (2.4.1.1) and (2.4.1.2) we have the Laplace transform of the density function of the subbusy period B_1

$$B_1(s) = P[C_1 \le T] T(s) [q_{1w}^* B_1(s) + (1 - q_{0w}^* - q_{1w}^*) B_2(s) + q_{0w}^* (1 - q_{0T}) B_0(s) + q_{0w}^* q_{0T} T(s)]$$

$$+ P[\, C_1 > T \,]\, C_1^*(s)\, [\, q_{1s}\, B_1(s) + (1 - q_{0s} - q_{1s})\, B_2(s)$$

$$+ q_{0s}\, (1 - q_{0T})\, B_0(s) + q_{0s}\, q_{0T}\, T(s)] \qquad (2.4.1.3)$$

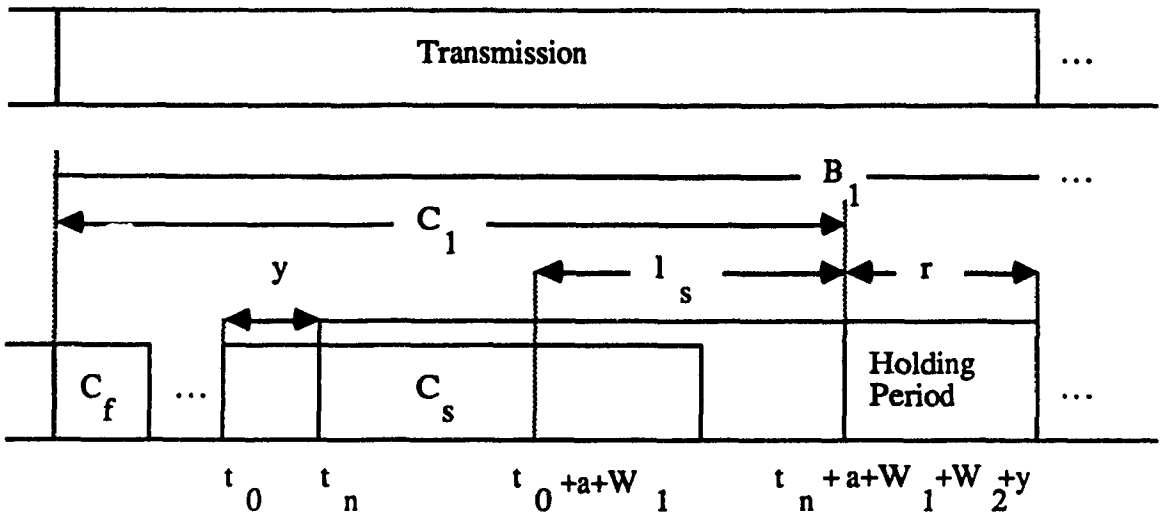

Figure 2.4.7 Subbusy period B_1

2.4.2 The subbusy period generated by two or more stations accumulated

The Laplace transform of the density function of B_2 in this case can be obtained by replacing C_1 by C_2 in (2.4.1.3)

$$B_2(s) = P[\, C_2 \le T \,]\, T(s)\, [q_{1w}^{**}\, B_1(s) + (1 - q_{0w}^{**} - q_{1w}^{**})\, B_2(s)$$

$$+ q_{0w}^{**}\, (1 - q_{0T})\, B_0(s) + q_{0w}^{**}\, q_{0T}\, T(s)]$$

$$+ P[\, C_2 > T \,]\, C_2^*(s)\, [\, q_{1s}\, B_1(s) + (1 - q_{0s} - q_{1s})\, B_2(s)$$

$$+ q_{0s}\, (1 - q_{0T})\, B_0(s) + q_{0s}\, q_{0T}\, T(s)\,] \qquad (2.4.2.1)$$

where $C_2^*(s)$ is the Laplace transform of the density function of C_2 given that $C_2 >$ T. q_{0w}^{**} is the probability that no message accumulated, q_{1w}^{**} the probability that only one message accumulated given that the holding period exists (i.e. $C_2 < T$).

2.4.3 The subbusy period starts with an idle period

The probability distribution of this subbusy period, depends on two situations. Let I_a^* be the duration of the idle period given that this idle period is shorter than the transmission period (Figure 2.4.8).

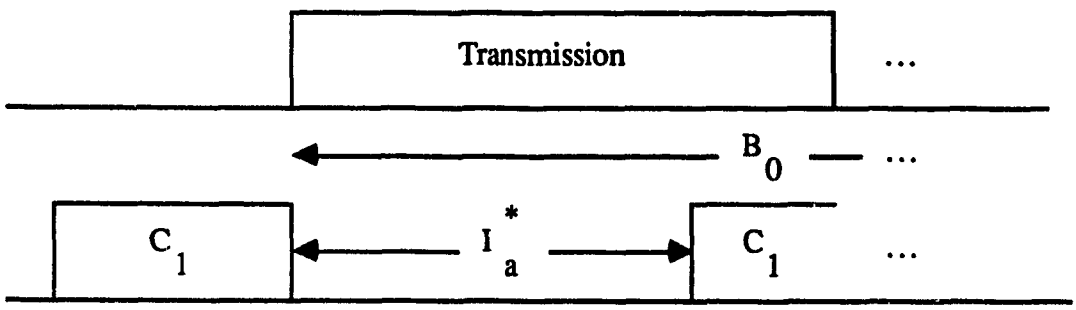

I_a^* : Idle Period given that it is shorter than the Transmission

C_1 : Contention Period

B_0 : Subbusy Period starts with an Idle Period

Figure 2.4.8 Subbusy period B_0

This idle period will be terminated by an arrival and the contention period starts. Let C_1 be this contention period. There are two possibilities, either $I_a^* + C_1 > T$ or $I_a^* + C_1 \leq T$. When $I_a^* + C_1 > T$ the subbusy period will be the sum of the idle period with the contention and the sub-subbusy period which depends on the number of messages

accumulated. When $I_a^* + C_1 \le T$ the subbusy period is the sum of the transmission time with the sub-subbusy period. Combining these two cases we get

$$B_0(s) = P[\, I_a^* + C_1 \le T\,]\, T(s)\, [\, q_{1w} B_1(s) + (1 - q_{0w} - q_{1w})\, B_2(s)$$

$$+ q_{0w}(1 - q_{0T})\, B_0(s) + q_{0w}\, q_{0T}\, T(s)]$$

$$+ P[\, I_a^* + C_1 > T\,]\, I_a^*(s)\, C_1^{**}(s)\, [\, q_{1s} B_1(s) + (1 - q_{0s} - q_{1s})\, B_2(s)$$

$$+ q_{0s}(1 - q_{0T})\, B_0(s) + q_{0s}\, q_{0T}\, T(s)\,] \qquad (2.4.3.1)$$

where C_1^{**} is the contention length conditioned on $I_a^* + C_1 > T$ and q_{1w}, q_{0w} are probabilities of 1 and 0 messages accumulated conditioned on $I_a^* + C_1 \le T$.

From equations (2.4.1.3), (2.4.2.1) and (2.4.3.1) the Laplace transforms of the density functions of B_0, B_1 and B_2 can be found. However, we are interested only in the expected values of these subbusy periods. Taking derivatives of (2.4.1.2), (2.4.2.1) and (2.4.3.1) at $s = 0$ we get the system of equations

$$\overline{B}_1 = P[\, C_1 \le T]\{T + q_{1w}^* \overline{B}_1 + (1 - q_{0w}^* - q_{1w}^*)\, \overline{B}_2$$

$$+ q_{0w}^*\, (1 - q_{0T})\, \overline{B}_0 + q_{0w}^*\, q_{0T}\, T\}$$

$$+ P[\, C_1 > T]\, \{\overline{C}_1^* + q_{1s}\, \overline{B}_1 + (1 - q_{0s} - q_{1s})\, \overline{B}_2$$

$$+ q_{0s}\, (1 - q_{0T})\, \overline{B}_0 + q_{0s}\, q_{0T}\, T\}$$

$$\overline{B}_2 = P[\, C_2 \le T\,]\, [\, T + q_{1w}^{**} \overline{B}_1 + (1 - q_{0w}^{**} - q_{1w}^{**})\, \overline{B}_2$$

$$+ q_{0w}^{**}\, (1 - q_{0T})\, \overline{B}_0 + q_{0w}^{**}\, q_{0T}\, T\,]$$

$$+ P[\, C_2 > T\,]\, \{\overline{C}_2^* + q_{1s}\, \overline{B}_1 + (1 - q_{0s} - q_{1s})\, \overline{B}_2$$

$$+ q_{0s}\, (1 - q_{0T})\, \overline{B}_0 + q_{0s}\, q_{0T}\, T\}$$

$$\overline{B}_0 = P[\,I_a^* + C_1 \le T\,]\,\{\,T + q_{1w}\overline{B}_1 + (1 - q_{0w} - q_{1w})\overline{B}_2$$

$$+ q_{0w}(1 - q_{0T})\overline{B}_0 + q_{0w}\,q_{0T}\,T\,\}$$

$$+ P[\,I_a^* + C_1 > T\,]\,\{\,\overline{I}_a^* + \overline{C}_2^{**} + q_{1s}\overline{B}_1 + (1 - q_{0s} - q_{1s})\overline{B}_2$$

$$+ q_{0s}(1 - q_{0T})\overline{B}_0 + q_{0s}\,q_{0T}\,T\,\}$$

Where $\overline{C}_1^*$ is the expected duration of a contention period initiated by one station given that the contention length is longer than the transmission time. $\overline{C}_2^*$ is the expected duration of a contention period initiated by more than one station given that contention length is longer than the transmission time. $\overline{C}_1^{**}$ is the expected duration of a contention period initiated by an arrival on the access channel given that the sum of the idle and the contention length is longer than the transmission time. To simplify the computation, let

$$\alpha_{00} = 1 - (1 - q_{0T})\,P[\,I_a^* + C_1 > T\,]\,q_{0s} - P[\,I_a^* + C_1 \le T\,](1 - q_{0T})\,q_{0w}$$

$$\alpha_{01} = -\,P[\,I_a^* + C_1 > T\,]\,q_{1s} - P[\,I_a^* + C_1 \le T\,]\,q_{1w}$$

$$\alpha_{02} = -\,P[\,I_a^* + C_1 > T\,](1 - q_{0s} - q_{1s}) - P[\,I_a^* + C_1 \le T\,](1 - q_{0w} - q_{1w})$$

$$\alpha_{10} = -\,P[\,C_1 \le T\,]\,q_{0w}^*\,(1 - q_{0T}) - P[\,C_1 > T\,]\,q_{0s}\,(1 - q_{0T})$$

$$\alpha_{11} = 1 - P[\,C_1 \le T]\,q_{1w}^* - P[\,C_1 > T]\,q_{1s}$$

$$\alpha_{12} = -\,P[\,C_1 \le T](1 - q_{0w}^* - q_{1w}^*) - P[\,C_1 > T\,](1 - q_{0s} - q_{1s})$$

$$\alpha_{20} = -\,P[\,C_2 \le T]\,q_{0w}^{**}\,(1 - q_{0T}) - P[\,C_2 > T]\,q_{0s}\,(1 - q_{0T})$$

$$\alpha_{21} = -\,P[\,C_2 \le T]\,q_{1w}^{**} - P[\,C_2 > T\,]\,q_{1s}$$

$$\alpha_{22} = 1 - P[\,C_2 \le T](1 - q_{0w}^{**} - q_{1w}^{**}) - P[\,C_2 > T\,](1 - q_{0s} - q_{1s})$$

$$\beta_0 = P[I_a^* + C_1 > T](\bar{I}_a^* + \bar{C}_1^{**} + q_{0s}\, q_{0T}\, T)$$

$$+ P[I_a^* + C_1 \le T](T + q_{0w}\, q_{0T}\, T)$$

$$\beta_1 = P[C_1 \le T](T + q_{0w}^{*}\, q_{0T}\, T) + P[C_1 > T](\bar{C}_1^{*} + q_{0s}\, q_{0T}\, T)$$

$$\beta_2 = P[C_2 \le T](T + q_{0w}^{**}\, q_{0T}\, T) + P[C_2 > T](\bar{C}_2^{*} + q_{0s}\, q_{0T}\, T)$$

and

$$\mathbf{B} = [\bar{B}_i] \quad i = 0,1,2$$
$$\alpha = [\alpha_{ij}] \; i,j = 0,1,2$$
$$\beta = [\beta_j] \; j = 0,1,2$$

we can write the system of equations in matrix form

$$\alpha\, \mathbf{B} = \beta$$

and the solution is simply

$$\mathbf{B} = \alpha^{-1}\, \beta \tag{2.4.13}$$

Using (2.4.13) $\bar{B}_0$, $\bar{B}_1$ and $\bar{B}_2$ can be found and the expected duration of the busy period is

$$\bar{B} = \bar{C}_1 + q_{1s}\, \bar{B}_1 + q_{0s}\, q_{0T}\, T + (1 - q_{0s} - q_{1s})\, \bar{B}_2 + q_{0s}\, (1 - q_{0T})\, \bar{B}_0$$

There are several parameters which must be found. First, the average idle period given that the idle period is shorter than the transmission time is

$$\bar{I}_a^*$$

$$\bar{I}_a^* = \int_0^T \frac{t\Lambda e^{-\Lambda t}}{1-e^{-\Lambda T}} dt = \frac{(1-e^{-\Lambda T}) - \Lambda T e^{-\Lambda T}}{\Lambda(1-e^{-\Lambda T})}$$

P[$C_1 \le T$], P[$C_2 \le T$] and P[$I_a^* + C_1 \le T$]

These quantities can be found numerically using the inverse Laplace transform

$$P[C_1 \le T] = \int_0^T C_1(t)\, dt = \mathcal{L}^{-1}\{ C_1(s)/s \}\Big|_{t=T} \qquad (2.4.14)$$

$$P[C_2 \le T] = \int_0^T C_2(t)\, dt = \mathcal{L}^{-1}\{ C_2(s)/s \}\Big|_{t=T} \qquad (2.4.15)$$

$$P[I_a^* + C_1 \le T] = \mathcal{L}^{-1}\{ I_a^*(s)\, C_1(s) \}\Big|_{t=T} \qquad (2.4.16)$$

P[$C_1 > T$] $\bar{C}_1^*$

We have

$$P[C_1 > T]\, \bar{C}_1^* = \int_T^\infty t\, C_1(t)\, dt = \int_0^\infty t\, C_1(t)\, dt - \int_0^T t\, C_1(t)\, dt$$

$$= \bar{C}_1 - \mathcal{L}^{-1}\{ -C_1'(s)/s \}\Big|_{t=T} \qquad (2.4.17)$$

using the property

$$\mathcal{L}\{ t\, f(t) \} = -F'(s)$$

where $F'(s)$ denote the first derivative $dF(s)/ds$.

$$P[\ C_2 > T\ ]\,\overline{C}_2^{*}$$

Similarly we have

$$P[\,C_2 > T\,]\,\overline{C}_2^{*} = \overline{C}_2 - \mathcal{L}^{-1}\{\,-C_2'(s)/s\,\}\,\Big|_{t=T} \qquad (2.4.18)$$

and

$$P[\ I_a^{*} + C_1\ > T\ ]\ (\overline{I}_a^{*} + \overline{C}_1^{**})$$

We have to find the Laplace transform of the density function of I_a^{*}. Starting with the density function

$$I_a^{*}(t) = \frac{\Lambda e^{-\Lambda t}}{1-e^{-\Lambda t}} \quad 0 < t \le T$$

we get

$$I_a^{*}(s) = \frac{\Lambda[1-e^{-(\Lambda+s)T}]}{(\Lambda+s)(1-e^{-\Lambda T})}$$

Then using the same manipulations used in the previous computations we have

$$P[\,I_a^{*} + C_1 > T\,]\,(\,\overline{I}_a^{*} + \overline{C}_1^{**}\,) = \overline{I}_a^{*} + \overline{C}_1 - \mathcal{L}^{-1}\{-\frac{1}{s}\frac{d}{ds}[\,I_a^{*}(s)\,C_1(s)\,]\,\}\,\Big|_{t=T}$$

q_{0w}, q_{1w}

As defined earlier, q_{0w}^{*} is the probability that no arrival in the interval l_f and r given that $C_1<T$. Now, if we define C^{*} the contention length excluding the last $W_2 + y$ seconds, the Laplace transform of its density function is

$$C^{*}(s) = \frac{C_1(s)}{e^{-sW_2}y(s)}$$

We are interested in the number of arrivals in the last $W_2 + y$ seconds of the contention period and the holding interval r. Let W(z) be the generating function of the number of arrivals in the last $W_2 + y$ seconds of the contention period and the holding interval r we have [Kle75]

$$W^*(z) = \frac{T(s)}{C^*(s)}\Big|_{s=\Lambda(1-z)}$$

q^*_{0w} is simply W(0) since $W^*(z) = \sum_{i=0}^{\infty} q^*_{iw} z^i$

$$q^*_{0w} = \frac{T(\Lambda)}{C^*(\Lambda)} \tag{2.4.20}$$

and

$$q^*_{1w} = \int_0^T C^*(t)\, \Lambda(T-t)\, e^{-\Lambda(T-t)} dt \tag{2.4.21}$$

$$= \mathcal{L}^{-1}\left\{ C^*(s) \frac{\Lambda}{(s+\Lambda)^2} \right\}\Big|_{t=T}$$

similarly define

$$C^{**}(s) = \frac{C_2(s)}{y(s)\, e^{-sW_2}}$$

and $$W^{**}(z) = \frac{T(s)}{C^{**}(s)}\Big|_{s=\Lambda(1-z)}$$

then

$$q^{**}_{0w} = W^{**}(0) = \frac{T(\Lambda)}{C^{**}(\Lambda)} \tag{2.4.22}$$

and

$$q_{1w}^{**} = \mathcal{L}^{-1}\left\{\frac{\Lambda C^{**}(s)}{(s+\Lambda)^2}\right\}\Big|_{t=T} \tag{2.4.23}$$

Finally,

$$q_{0w} = \frac{T(\Lambda)}{C(\Lambda)} \tag{2.4.24}$$

$$q_{1w} = \mathcal{L}^{-1}\left\{\frac{\Lambda C(s)}{(s+\Lambda)^2}\right\}\Big|_{t=T} \tag{2.4.25}$$

where C(s) is define as

$$C(s) = \frac{I^{*}(s)C_1(s)}{y(s)e^{-sW_2}}$$

q_{0s}

As mentioned earlier, we define q_{0s} as the probability of no arrival in l_s given that the contention is successful.

$$q_{0s} = \frac{e^{-\Lambda(a+W_1)}e^{-\Lambda W_2}}{e^{-\Lambda(a+W_3)}} + \frac{1}{e^{-\Lambda(a+W_3)}}\int_{a+W_3}^{a+W_1} e^{-\Lambda(a+W_3)}\Lambda e^{-\Lambda(a+W_1-t)}e^{-\Lambda(W_2+t)}dt$$

$$= e^{-\Lambda(W_1+W_2-W_3)} + \Lambda(W_1-W_3)\,e^{-\Lambda(a+W_1+W_2)} \tag{2.4.27}$$

and

$$q_{1s} = \frac{e^{-\Lambda(a+W_1)}\Lambda W_2 e^{-\Lambda W_2}}{e^{-\Lambda(a+W_3)}} + \frac{1}{e^{-\Lambda(a+W_3)}}\int_{a+W_3}^{a+W_1} e^{-\Lambda(a+W_3)}\Lambda e^{-\Lambda(a+W_1-t)}\Lambda(W_2+t)\,e^{-\Lambda(W_2+t)}dt$$

$$= \Lambda W_2 e^{-\Lambda(W_1+W_2+W_3)} + e^{-\Lambda(a+W_1+W_2)} \Lambda^2 \left(W_2(W_1-W_3) + \frac{(a+W_1)^2-(a+W_3)^2}{2} \right)$$

(2.4.28)

The Laplace transform of the density function of the transmission time is simply $T(s) = e^{-sT}$

Now, the only remaining term we need to compute the throughput is the average utilization period. We know that the utilization period will be T if no message arrives in l_s and the transmission time. Otherwise, it is the sum of the transmission time and the sub-utilization period which has the same distribution. We can write

$$\overline{U} = T + (1 - q_{0s}\, q_{0T})\, \overline{U}$$

or

$$\overline{U} = \frac{T}{q_{0s} q_{0T}}$$

Equations (2.4.12)-(2.4.28) permit the calculation of throughput

$$\overline{S} = \frac{\overline{U}}{\overline{B}+\overline{I}} = \frac{\overline{U}}{\overline{B}+1/\Lambda}$$

Figure 2.4.9 shows the throughput of prescheduling CSMA/CF versus others. We can see that it is even better than non-persistent CSMA/CD.

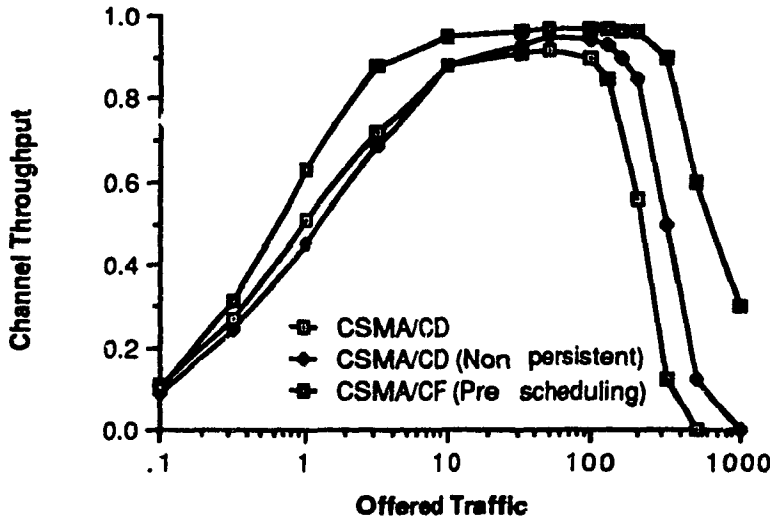

a=0.01, W_1 =0.01, W_2 =0.03, W_3 =0, T=1, d=0.04

Figure 2.4.9 Throughput of CSMA/CF

CHAPTER III

SUMMARIES AND CONCLUSIONS

In the previous chapter, we have presented the analysis of four CSMA/CF variations, namely nonpersistent, persistent with and without prescheduling. Nonpersistent CSMA/CF throughput is worse than nonpersistent CSMA/CD throughput with the same set of parameters. On the other hand, throughput of persistent CSMA/CF is better than that of persistent CSMA/CD with the same set of parameters. On the contrary, persistent CSMA/CF performs better than its nonpersistent counterpart. Also, from the access algorithm, CSMA/CF protocols are suitable to be implemented in a prescheduling way since the collision avoidance period is separated from the transmission. This prescheduling can be seen as a reservation system where stations try to compete for the next transmission during the present transmission. This results into a substantial increase in channel throughput especially at heavy loading.

As mentioned earlier, Wong performed an early analysis on the protocol [Won85]. However, his analysis has several limitations. First of all, he assumed that all stations always have messages ready to transmit. This assumption can be used to study the protocol behavior only at heavy loading and the arrival process is not taken into consideration. Secondly, he assumed that all station attempts are uniformly distributed over a lateral interval [0,T]. This in fact takes into account that synchronous circuits operate on a periodic basis where T is the cycle. However, the access protocol in this case will become nonpersistent, not persistent as described in his work. Also, it is possible to design a circuit operating on interrupt to persistently check the access channel. Despite all these limitations,

Wong's results are moderately accurate. Figure 3.1 shows the comparison between Wong's result and result obtained from the new analysis.

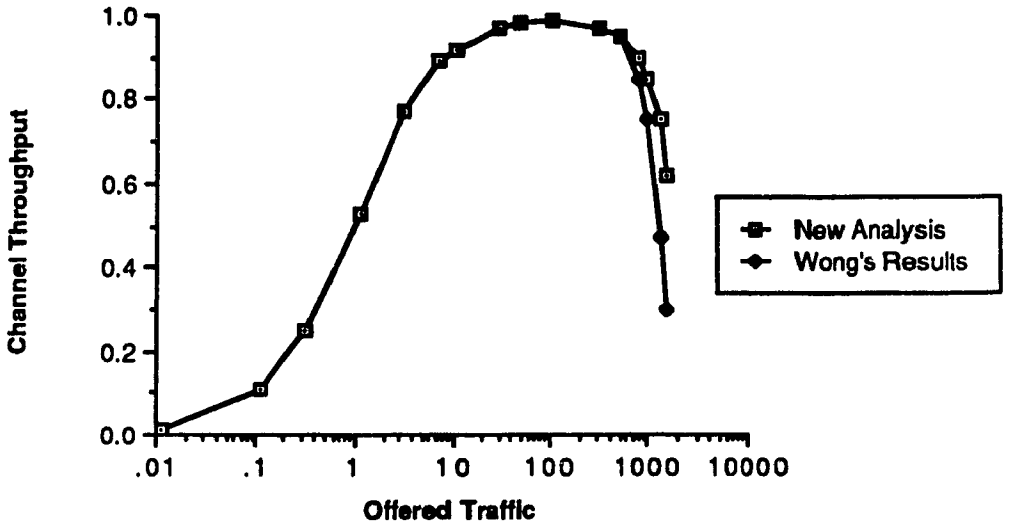

Parameters : New analysis a=0.003, T=1, W_1=0.003, W_2=0.009, W_3=0

Wong's analysis a=100ns, T=1μs, τ=30μs, W_1=100ns, W_2=300ns, W_3=0

Figure 3.1 New and old analyses

The analysis employed in this thesis exploits the renewal theory where a random variable is expressed in terms of other random variables having the same distribution. This analysis can be used to analyze the persistent CSMA/CD protocol (the correct result of which has only been obtained recently by [Tak87, Soh87]). For nonpreschedulling cases, no numerical Laplace inversion is necessary.

The delay analysis can employ a method similar to the embedded Markov chain approach used in the M/G/1 or slotted CSMA/CD analysis [Kle75, Lam80]. If the embedded points are the departure times, the delay analysis is straightforward since the Laplace transform of the density function of the interdeparture time is readily obtained in the previous chapter.

The protocol has been implemented in a VLSI design of the H-station controller. This design is a microprogrammed architecture in which the access algorithm is stored in EPROM. Although the layout was sent to the Canadian Microelectronic Corporation, the chip is not ready for testing at this time. Further details can be found in [Phu86].

To conclude, the analysis has pointed out some interesting results of the CSMA/CF protocol. In this protocol, a persistent strategy yields better throughput. Also, it introduces an alternative way to analyze prescheduling CSMA variations.

BIBLIOGRAPHY

[Abr70] Abramson N, "The Aloha System", *AFIPS Conf. Proc.*, Vol. 37, pp. 281-285, FJCC, 1970.

[Bat76] Batcher K.E., "The Flip Network in Staran", *Proc. 1976 Int'l Conf. Parallel Processing*, pp. 65-71, Aug 1976.

[Bel66] Bellman R. et al., *Numerical Inversion of the Laplace Transform : Application to Biology, Economics, Engineering and Physics*, American Elsevier Publishing, Newyork, 1966.

[Bon72] Bonknight W.J. et al., "The Illiac IV System", *Proc. IEEE*, pp. 369-388, Apr 1972.

[Den80] Dennis J.B., "Data Flow Supercomputers", *Computer*, Vol.13, No. 11, pp. 48-56, Nov. 1980.

[Dim80] Dimopoulos N., "Organization and Stability of a Neural Network Class and the Structure of a Multiprocessor System", *Ph.D. Thesis*, University of Maryland, 1980.

[Dim83] Dimopoulos N. "The Homogeneous Multiprocessor Architecture - Structure and Performance Analysis", *Proc. of the 1983 Int'l Conf. on Parallel Processing*, pp. 520-523, August 1983.

[Dim83b] Dimopoulos N. and D. Kehayas, "The H-Network A High Speed Distributed Packet Switching Local Computer Network", *Proc. on MELECON'83*, Athens, Greece, pp. A01-A02, May 1983.

[Dim84] Dimopoulos N. and C.W. Wong, "Performance Evaluation of the H-network through Simulation", *European Meeting*, Digitech, Jul 1984.

[Dim84b] Dimopoulos N. et al., "Simulation and Performance of the Homogeneous Multiprocessor", *Summer Computer Simulation Conf.*, Boston, M.A., Jul 1984.

[Dim85] Dimopoulos N. "On the Structure of the Homogeneous Multiprocessor", *IEEE Trans. on Computers*, Vol. C-34, No. 2, pp. 141-150, Feb 1985.

[Hay84] Hayes J.F., *Modelling and Analysis of Computer Communication Networks*, Plenum, 1984.

[Hay85] Hayes J.F. et al., "An Optical Fiber Based Local Backbone Network", *COMPINT*, Montreal, Quebec, Sept. 1985.

[Hwa84] Hwang K. and F.A. Briggs, *Computer Architecture and Parallel Processing*, McGraw-Hill, 1984.

[Keh83] Kehayas D., "The H-Network - A Packet Switching Local Area Network", *M. Eng. Major Technical Report*, Concordia University, 1983.

[Kle75] Kleinrock L. and F.A. Tobagi, "Packet Switching in Radio Channels : Part I - Carrier Sense Multiple Access Modes and Their Throughput-Delay Characteristics", *IEEE Trans. on Comm.*, Vol. Com-23, No. 12, Dec 1975.

[Kle75b] Kleinrock L. and F.A. Tobagi, "Packet Switching in Radio Channels : Part II - The Hidden Terminal Problem in Carrier Sense Multiple Access and Busy-Tone Solution", *IEEE Trans. on Comm.*, Vol Com-23, pp. 1417-1433, Dec 1975

[Kle76] Kleinrock L., *Queuing Systems Volume I : Theory*, Wiley Interscience, 1976.

[Kle76b] Kleinrock L., *Queuing Systems Volume II : Computer Application* ,Wiley Interscience, 1976.

[Kuc78] Kuck J.D., *The Structure of Computers and Computations*, Vol. 1, John Wiley and Sons Inc., 1978.

[Lam80] Lam S.S., "A Carrier Sense Multiple Access Protocol for Local Area Network", *Computer Networks*, Vol. 4(1), pp. 21-23, Jan 1980.

[Lit61] Little J., "A Proof of the Queueing Formula L=λM", *Operation Research*, Vol. 9, pp. 383-387, Mar-Apr 1961.

[Lun80] Lundstrom J. and G. Bonnes, "A Controllable MIMD Architecture", *Proc. 1980 Int'l Conf. Parallel Processing*, pp. 19-27.

[Med80] Meditch J.S. and C.T.A. Lee, "Stability and Optimization of the CSMA and CSMA/CD Channels", *IEEE Trans. Comm.*, Vol. COM-31(6), pp. 763-774, Jun 80.

[Met76] Metcalfe R.M. et al., "Ethernet : Distributed Packet Switching for Local Computer Networks", *Communications of the ACM*, Vol. 19, pp. 395-404, Jul 1976.

[Pap65] Papoulis A., Probability, *Random Variables and Stochastic Processes*, McGraw Hill, 1965.

[Phu86] Phung V.P.T., "A microprogrammed design for H-network Controller", *VLSI Project*, M.Eng. Project Work, 1986, Concordia University.

[Rui67] Ruiz-Pala E. et al., Waiting-Line Models, *An Introduction to their Theory and Application*, Reinhold Publishing, 1967.

[Sau81] Sauer C.H. and K. Mani Chandy, *Computer Systems Performance Modelling*, Prentice Hall Inc., Englewood Cliffs, N.J., 1981.

[Smi78] Smith B.J., "A Pipelined, Shared Resource MIMD Computer", *Proc. 1978 Int'l Conf. Parallel Processing*, pp. 6-8.

[Soh87] Sohraby K. et al., "Comment on 'Throughput Analysis for Persistent CSMA Systems'", *IEEE Trans. Comm.*, Vol COM-35, No 2, Feb 1987, pp. 240-243.

[Swa77] Swan R.J. et al, "Cm* - A Modular, Multi-Microprocessor", *Proc. NCC*, pp. 637-644, 1977.

[Tak62] Takacs L., *Introduction to the Theory of Queues*, Oxford University press, 1962.

[Tak85] Takagi H. and Kleinrock L. "Throughput Analysis for Persistent CSMA Systems", *IEEE Trans. Comm.*, Vol. Com-33, No 7, July 1985.

[Tak87] Takagi H. and L. Kleinrock, "Correction to 'Throughput Analysis for Persistent CSMA Systems'", *IEEE Trans. Comm.*, Vol COM-35, No 2, Feb 1987, pp. 243-245.

[Tan81] Tanembaum A.S., *Computer Networks*, Prentice Hall Inc., 1981.

[Tob78] Tobagi F.A. et al., "Modelling and Measurement Techniques in Packet Communication Network", *IEEE Proceeding*, pp.1423-1447, Nov 1978.

[Tob80] Tobagi F.A. and V.B. Hunt , "Performance Analysis of Carrier Sense Multiple Access with Collision Detection", *Computer Networks*, No 4, 1980.

[Vod84] Vo-Dai T., "A Steady State Analysis of CSMA/CD", *Performance '84*, Elsevier Science Publishers B.V., North-Holland, 1984.

[Wol72] Wolf W.A. and C.G. Bell, "C.mmp - A Multi-Miniprocessors", *Fall Joint Computer Confereance*, pp-756-777, 1972.

[Won85] Wong C.W., "A Collision Free Protocol for LANs Utilizing Concurrency for Channel Contention and Transmission", *M.Eng. Thesis*, Concordia University, 1985.